UTTARAKHAND STATE INFRASTRUCTURE DEVELOPMENT CORPORATION LTD.

3/3, Industrial Area, Patel Nagar, Dehradun

Telefax- 0135-2522941 email- usidcl@gmail.com

CONSTRUCTION OF 50 NOs. OF PRE-FABRICATED HOUSES IN BAGESHWAR DISTRICT OF UTTARAKHAND

AGREEMENT NO…….

NATIONAL COMPETITIVE BIDDING
(CIVIL WORKS)

NAME OF WORK	:	Construction of 50 Nos. of Pre-fabricated Houses in Bageshwar District of Uttarakhand.
PERIOD OF SALE OF BIDDING DOCUMENT	:	FROM : 09.10.2013 TO : 22.10.2013
TIME AND DATE OF PRE-BID CONFERENCE	:	DATE 15.10.2013, TIME 1530 Hrs.
LAST DATE AND TIME FOR RECEIPT OF BIDS	:	DATE 22.10.2013, TIME 1500 Hrs.
TIME AND DATE OF OPENING OF BIDS	:	DATE 22.10.2013, TIME 1730 Hrs.
PLACE OF OPENING OF BIDS	:	USIDCL, 3/3 Industrial Area, Patel Nagar, Dehradun.
OFFICER INVITING BIDS	:	Project Manager, PIU, USIDCL, 3/3, Industrial Area, Patel Nagar, Dehradun.

October 2013

Table of Contents

INVITATION FOR BID **3**

Section I. Instructions to Bidders **6**
Table of Clauses 7

Section II. Bidding Data Sheet **31**

Section III. Eligible Countries **36**

Section IV. Forms of Bid, Qualification Information, Letter of Acceptance, and Agreement **37**
1. Contractor's Bid 38
2. Qualification Information 40
3. Letter of Acceptance 51
4. Agreement 54

Section V: Conditions of Contract **56**
Table of Clauses 57

Section VI. Special Conditions of Contract **86**

Appendices **94**
Salient Features of Labour Laws 95
BOQ Schedules 99
Appointment of Adjudicator 100

Section VII. Specifications & Performance Requirements **104**

Section VIII. Drawings **113**

Section IX. Bill of Quantities **126**

Section X. Security Forms **127**
Form of Bid Security (Bank Guarantee) 129
Performance Bank Guarantee 131

INVITATION FOR BID

(IFB)

GOVERNMENT OF UTTARAKHAND

CONSTRUCTION OF 50 NOs OF PRE-FABRICATED HOUSES.

INVITATIONS FOR BIDS (IFB)

NATIONAL COMPETITIVE BIDDING

Date : 09.10.2013
Bid No.: 09/USIDCL- 391 /2013

1. The Government of Uttarakhand through Government of India has applied for credit from the International Development Association (IDA) for Construction of 50 Nos. of Pre-fabricated Houses in Bageshwar District of Uttarakhand towards the cost of Uttarakhand Disaster Recovery Project and intends to apply a part of the funds to cover eligible payments under the contracts for construction of works as detailed below. Bidding is open to all bidders from eligible source countries as defined in the *IBRD Guidelines for Procurement.* Bidding from India should, however, be registered with the Government of Uttarakhand or other State Government/Government of India, or State/Central Government Undertakings. Bidders are advised to note the minimum qualification criteria specified in Clause 5 of the instructions to Bidders to qualify for the award of the contract.

2. The Uttarakhand State Infrastructure Development Corporation Ltd. (USIDCL) invites bids for the construction of works detailed in the table. The bidder is required to submit bid for all of the works indicated in the table below.

3. Bidding documents (and additional copies) may be purchased from the office of USIDCL, 3/3, Industrial Area, Patel Nagar, Dehradun from 09.10.2013 to 22.10.2013, for a non-refundable fee (two sets) as indicated, in the form of cash/demand draft in favour of MD, USIDCL, payable at Dehradun. Interested bidders may obtain further information at the same address.

4. Bids must be accompanied by security of the amount specified for the work in the table below, drawn in favour of MD, USIDCL Bid security will have to be in any one of the forms as specified in the bidding document and shall have to be valid for 45 days beyond the validity of the bid.

5. Bids must be delivered to Uttarakhand State Infrastructure Development Corporation Ltd (USIDCL), 3/3, Industrial Area, Patel Nagar, Dehradun on or before 1500 hours on 22.10.2013 and will be opened on the same day at 1730

hours, in the presence of the bidders who wish to attend. If the office happens to be closed on the date of receipt of the bids as specified, the bids will be received and opened on the next working day at the same time and venue.

6. A pre-bid meeting will be held on 15.10.2013 at 1530 hrs. at the office of USIDCL, 3/3, Industrial Area, Patel Nagar, Dehradun to clarify the issues and to answer questions on any matter that may be raised at that stage as stated in Clause 9.2 of 'Instructions to Bidders' of the bidding document.
7. Other details can be seen in the bidding documents.
8. The address for communication is as under:

(a) Name & Designation of Officer: Shri V.C. Barthwal, Project Manager, Dehradun.

(b) Official Address: USIDCL, 3/3, Industrial Area, Patel Nagar, Dehradun.

(c) Email: usidcl@gmail.com, usidcl@yahoo.co.in

(d) Telephone: 0135-2522941

TABLE

Package No.	**Name of work**	**Approximate value* of work (Rs.)**	**Bid security* (Rs.)**	**Cost of document (Rs.)**	**Period of completion**
1	2	3	4	5	6
I	Construction of 50 Nos. of Pre-fabricated Houses in Bageshwar District of Uttarakhand	3.00 Crore	7.50 Lac	10,000.00	1.5 months

Seal of office

Section I. Instructions to Bidders

Table of Clauses

A. General 9
1. Scope of Bid 9
2. Source of Funds 9
3. Fraud and Corruption 10
4. Eligible Bidders 11
5. Qualifications of the Bidder 12
6. One Bid per Bidder 17
7. Cost of Bidding 17
8. Site Visit 17

B. Bidding Documents 17
9. Contents of Bidding Documents 17
10. Clarification of Bidding Documents 17
11. Amendment of Bidding Documents 18

C. Preparation of Bids 19
12. Language of Bid 19
13. Documents Comprising the Bid 19
14. Bid Prices 19
15. Currencies of Bid and Payment 20
16. Bid Validity 20
17. Bid Security 21
18. Alternative Proposals by Bidders 22
19. Format and Signing of Bid 22

D. Submission of Bids 23
20. Submission, Sealing and Marking of Bids 23
21. Deadline for Sub-mission of Bids 23
22. Late Bids 23
23. Withdrawal, Substitution and Modification of Bids 24

E. Bid Opening and Evaluation 24
24. Bid Opening 24
25. Confidentiality 25
26. Clarification of Bids 25
27. Examination of Bids and Determination of Responsiveness 25
28. Correction of Errors 26
29. Currency for Bid Evaluation 26
30. Evaluation and Comparison of Bids 27
31. Preference for Domestic Bidders 28

F. Award of Contract 28

32. Award Criteria 28
33. Employer's Right to Accept any Bid and to Reject any or all Bids 28
34. Notification of Award and Signing of Agreement 28
35. Performance Security 29
36. Advance Payment and Security 29
37. Adjudicator /Disputes Review Expert 30

Instructions to Bidders (ITB)

A. General

1. Scope of Bid

1.1 The Employer **as defined**[1] **in Section II "Bidding Data Sheet" (BDS)**, invites bids for the construction of Works, as described in the **BDS** and Section VI, "Special Conditions of Contract" (SCC). The name and identification number of the Contract are provided in the **BDS** and the SCC.

1.2 The successful Bidder shall be expected to complete the Works by the Intended Completion Date specified in the **BDS** and SCC 1.1 (r).

1.3 Throughout these Bidding Documents:

(a) the term "in writing" means communicated in written form (e.g. by mail, e-mail, fax, telex,) with proof of receipt;

(b) if the context so requires, "singular" means "plural" and vice versa; and

(c) "day" means calendar day.

2. Source of Funds

2.1 The Government of India has received financing from the World Bank, **as defined in the BDS,** towards the cost of the Project, **as defined in the BDS,** to cover eligible payments under the Contract for the Works. Payments by the World Bank shall be made only at the request of the Borrower and upon approval by the World Bank in accordance with the Loan Agreement, and shall be subject in all respects to the terms and conditions of that Agreement. Except as the World Bank may specifically otherwise agree, no party other than the Borrower shall derive any rights from the Loan Agreement or have any rights to the loan proceeds.

2.2 The loan agreement prohibits a withdrawal from the loan account for the purpose of any payment to persons or entities, or for any import of goods, if such payment or import, to the knowledge of the Bank, is prohibited by a decision of the United Nations Security Council, taken under Chapter VII of the Charter of the United Nations.

---

[1] *See Section V, "General Conditions of Contract," Clause 1. Definitions.*

3. Fraud and Corruption

3.1 It is the Bank's policy to require that Borrowers (including beneficiaries of Bank loans), as well as bidders, suppliers, and contractors and their subcontractors under Bank-financed contracts, observe the highest standard of ethics during the procurement and execution of such contracts.[2] In pursuance of this policy, the Bank:

(a) defines, for the purposes of this provision, the terms set forth below as follows:

(i) "corrupt practice"[3] is the offering, giving, receiving or soliciting, directly or indirectly, of anything of value to influence improperly the actions of another party;

(ii) "fraudulent practice"[4] is any act or omission, including a misrepresentation, that knowingly or recklessly misleads, or attempts to mislead, a party to obtain a financial or other benefit or to avoid an obligation;

(iii) "collusive practice"[5] is an arrangement between two or more parties designed to achieve an improper purpose, including to influence improperly the actions of another party;

(iv) "coercive practice"[6] is impairing or harming, or threatening to impair or harm, directly or indirectly, any party or the property of the party to influence improperly the actions of a party;

(v) "obstructive practice" is

(aa) deliberately destroying, falsifying, altering or concealing of evidence material to the investigation or making false statements to investigators in order to materially impede a Bank investigation into allegations of a corrupt,

---

2 *In this context, any action taken by a bidder, supplier, contractor, or a sub-contractor to influence the procurement process or contract execution for undue advantage is improper.*

3 *"another party" refers to a public official acting in relation to the procurement process or contract execution]. In this context, "public official" includes World Bank staff and employees of other organizations taking or reviewing procurement decisions.*

4 *a "party" refers to a public official; the terms "benefit" and "obligation" relate to the procurement process or contract execution; and the "act or omission" is intended to influence the procurement process or contract execution.*

5 *"parties" refers to participants in the procurement process (including public officials) attempting to establish bid prices at artificial, non competitive levels.*

6 *a "party" refers to a participant in the procurement process or contract execution.*

fraudulent, coercive or collusive practice; and/or threatening, harassing or intimidating any party to prevent it from disclosing its knowledge of matters relevant to the investigation or from pursuing the investigation; or

(bb) acts intended to materially impede the exercise of the Bank's inspection and audit rights provided for under sub-clause 3.1 (e) below.

(b) will reject a proposal for award if it determines that the bidder recommended for award has, directly or through an agent, engaged in corrupt, fraudulent, collusive, coercive or obstructive practices in competing for the contract in question;

(c) will cancel the portion of the loan allocated to a contract if it determines at any time that representatives of the Borrower or of a beneficiary of the loan engaged in corrupt, fraudulent, collusive, or coercive practices during the procurement or the execution of that contract, without the Borrower having taken timely and appropriate action satisfactory to the Bank to address such practices when they occur;

(d) will sanction a firm or individual, including declaring ineligible, either indefinitely or for a stated period of time, to be awarded a Bank-financed contract if it at any time determines that the firm has, directly or through an agent, engaged in corrupt, fraudulent, collusive, coercive or obstructive practices in competing for, or in executing, a Bank-financed contract; and

(e) will have the right to require that a provision be included in bidding documents and in contracts financed by a Bank loan, requiring bidders, suppliers, and contractors and their sub-contractors to permit the Bank to inspect their accounts and records and other documents relating to the bid submission and contract performance and to have them audited by auditors appointed by the Bank.

3.2 Furthermore, bidders shall be aware of the provision stated in GCC Sub-Clause 60.

4. Eligible Bidders

4.1 A Bidder, and all parties constituting the Bidder, may have the nationality of any country, subject to the provisions of Section III, Eligible Countries. A Bidder shall be deemed to have the

nationality of a country if the Bidder is a citizen or is constituted, incorporated, or registered and operates in conformity with the provisions of the laws of that country. This criterion shall also apply to the determination of the nationality of proposed subcontractors.

4.2 A Bidder shall not have a conflict of interest. All Bidders found to have conflict of interest shall be disqualified. Bidders may be considered to have a conflict of interest with one or more parties in this bidding process, if they are associated, or has been associated in the past, directly or indirectly, with the consultant or any other entity that has prepared the design, specifications, and other documents for the Project or being proposed as Project Manager for the Contract. A firm that has been engaged by the Borrower to provide consulting services for the preparation or supervision of the Works, and any of its affiliates **shall not be eligible to bid.**

4.3 A Bidder that is under a declaration of ineligibility by the Bank in accordance with ITB Clause 3, at the date of contract award, shall be disqualified. The list of such debarred firms is available at the electronic address **specified in the BDS.**

4.4 A firm that has been determined to be ineligible by the Bank in relation to the Bank Guidelines On Preventing and Combating Fraud and Corruption in Projects Financed by IBRD Loans and IDA Credits and Grants shall be not be eligible to be awarded a contract.

4.4 Government-owned enterprises in the Employer's country may be eligible only if they can establish that they (i) are legally and financially autonomous, (ii) operate under commercial law, and (iii) that they are not a dependent agency of the Borrower or Sub-Borrower or Employer.

4.5 Bidders shall provide such evidence of their continued eligibility satisfactory to the Employer, as the Employer shall reasonably request.

5. Qualifications of the Bidder

5.1 All bidders shall provide in Section IV, "Form of Bid, Qualification Information, Letter of Acceptance, and Agreement," a preliminary description of the proposed work method and schedule, including drawings and charts, as necessary, as further elaborated in ITB Clause 5.3(k).

5.2 In the event that prequalification of potential bidders has been undertaken, only bids from prequalified bidders shall be

considered for award of Contract. These qualified bidders should submit with their bids any information updating their original prequalification applications. The update or confirmation should be provided in Section IV.

With the updated information the bidder must continue to be qualified in accordance with the criteria laid down in the prequalification document. All bidder shall also furnish the information for the following in Section IV irrespective of the bidders being pre-qualified:

(i) Power of Attorney.

(ii) Evidence of access to or availability of credit facilities certified by bankers.

(iii) Details as stipulated in clause 5.3 (g) to (k)

5.3 If the Employer has not undertaken prequalification of potential bidders, all bidders shall include the following information and documents with their bids in Section IV, unless otherwise **stated in the BDS**:

(a) copies of original documents defining the constitution or legal status, place of registration, and principal place of business of the Bidder; written power of attorney of the signatory of the Bid to commit the Bidder;

(b) total monetary value of construction works performed for each of the last five years;

(c) experience in works of a similar nature and size for each of the last five years, and details of work under way or contractually committed; and clients who may be contacted for further information on those contracts;

(d) major items of construction equipment proposed to carry out the Contract;

(e) qualifications and experience of key site management and technical personnel proposed for the Contract;

(f) reports on the financial standing of the Bidder, such as profit and loss statements and auditor's reports for the past five years;

(g) evidence of adequacy of working capital for this Contract (access to line(s) of credit and availability of other financial resources);

(h) authority to seek references from the Bidder's bankers;

(i) information regarding any litigation, current or during the last five years, in which the Bidder was/is involved, the parties concerned, and the disputed amounts; and awards;

(j) proposals for subcontracting components of the Works amounting to more than 10 percent of the Contract Price. The ceiling for sub contractor's participation is **stated in the BDS** [*for each the qualification and experience of the identified sub-contractor in the relevant field should be annexed. No vertical splitting of work for subcontracting is acceptable*]

(k) the proposed methodology and program of construction including Environment Management Plan, backed with equipment, materials and manpower planning and deployment, duly supported with broad calculations and quality control procedures proposed to be adopted, justifying their capability of execution and completion of the work as per technical specifications within the stipulated period of completion as per milestones.

5.4 Bids from Joint ventures are not acceptable.

5.5 To qualify for award of the Contract, the bidder in its name should have, in the last five years[7], as specified in the BDS, the following experience and licenses:

A (a) achieved in at least two financial years, a minimum annual financial turnover (in all cases of civil engineering construction works of similar nature only) as specified in BDS[8];

(b) satisfactorily completed (not less than 90% of contract value), as prime Contractor (or as a sub-contractor duly certified by the employer / main contractor) at least one similar work of value not less than the amount specified in BDS[9]

[7] Specify the financial years: they should be those immediately preceding the financial year in which the bids are received.

[8] Usually not less than two times the estimated annual payments under the contract.

[9] Usually not less than 80% of estimated value of contract;

(c) executed in any one year, the minimum quantities of work specified in BDS[10].

(d) The contractor or his identified sub-contractor should possess required valid electrical license for executing the building electrification works and should have executed similar electrical works for a minimum amount as indicated in BDS in any one year.

(e) The contractor or his identified sub-contractor should possess required valid license for executing the water supply/sanitary engineering works and should have executed similar water supply/sanitary engineering works for a minimum amount as stated in BDS in any one year.

5.5 **B : Each bidder should further demonstrate & confirm:**

(a) availability for construction work, either owned, or on lease or on hire, of the key and critical equipment stated in the BDS including equipment required for establishing field laboratory to perform mandatory tests, as stated in the BDS;

(b) availability for construction work a Contractor's Representative and other key technical personnel with adequate experience as stated in the BDS. The bidder must not have in his employment[11].

(i) the near relations(defined as first blood relations, and their spouses, of the bidder or the bidder's spouse) of persons listed in the BDS[12];

(ii) without Government permission, any person who retired as gazetted officer within the last two years;

(c) availability of liquid assets and/or credit facilities, net of other contractual commitments and exclusive of any advance payments which may be made under the Contract, of not less than the amount specified in the BDS[13].

5.5 **C: To qualify for a package of contract made of this and other contracts for which bids are invited in the IFB**, the bidder must demonstrate having experience and resources sufficient to meet the aggregate of the qualifying

[10] Usually 80% of the estimated production rate in peak year of construction.
[11] Applicable as per guidelines of the government. Delete if not applicable
[12] Indicate the persons of controlling departments inviting bids
[13] Usually the estimate of accumulated payments flow over 2 to 3 months availability to be certified by the Bankers in the specified format

criteria for the individual contracts.

5.6 Sub-Contractors' experience and resources shall not be taken into account in determining the bidder's compliance with the qualifying criteria except to the extent stated in 5.5 A above.

5.7 Bidders who meet the minimum qualification criteria will be qualified only if their available bid capacity for construction work is equal to or more than the total bid value. The available bid capacity will be calculated as under:

Assessed Available bid capacity = (A*N*1.5-B)

Where,

A= Maximum value of civil engineering works executed in any one year during the last five years (updated to the price level of the financial year and the percentage escalation as stated in the BDS, taking into account the completed as well as works in progress).

N = Number of years prescribed for completion of the works for which bids are invited (period up to 6 months to be taken as half-year and more than 6 months as one year).

B= Value, at the current price level, of existing commitments and on-going works to be completed during the period of completion of the works for which bids are invited.

Note : *The statements in Section II showing the value of existing commitments and on-going works as well as the stipulated period of completion remaining for each of the works listed should be countersigned by the Engineer in charge, not below the rank of an Executive Engineer or equivalent.*

5.8 Even though the bidders meet the above qualifying criteria, they are subject to be disqualified if they have:-

- made misleading or false representations in the forms, statements, affidavits and attachments submitted in proof of the qualification requirement;
- record of poor performance such as abandoning the works, not properly completion or financial failures etc.;
- consistent history of litigation or arbitration awards against the bidder or any partner of the joint venture.

- participated in the previous bidding *(if this is a re-bidding)* for the same work and had quoted unreasonably high bid price and could not furnish rational justification to the employer.

6. One Bid per Bidder

6.1 Each Bidder shall submit only one Bid. A Bidder who submits or participates in more than one Bid (other than as a subcontractor or in cases of alternatives that have been permitted or requested) shall cause all the proposals with the Bidder's participation to be disqualified.

7. Cost of Bidding

7.1 The Bidder shall bear all costs associated with the preparation and submission of his Bid, and the Employer shall in no case be responsible or liable for those costs.

8. Site Visit

8.1 The Bidder, at the Bidder's own responsibility and risk, is encouraged to visit and examine the Site of Works and its surroundings and obtain all information that may be necessary for preparing the Bid and entering into a contract for construction of the Works. The costs of visiting the Site shall be at the Bidder's own expense.

B. Bidding Documents

9. Contents of Bidding Documents

9.1 The set of Bidding Documents comprises the documents listed in the table below and addenda issued in accordance with ITB Clause 11:

Invitation for Bids

Section I	Instructions to Bidders
Section II	Bidding Data Sheet
Section III	Eligible Countries
Section IV	Forms of Bid, Qualification Information, Letter of acceptance, Agreement
Section V	General Conditions of Contract
Section VI	Special Conditions of Contract
Section VII	Specifications
Section VIII	Drawings
Section IX	Bill of Quantities
Section X	Forms of Securities

10. Clarification of Bidding Documents

10.1 A prospective Bidder requiring any clarification of the Bidding Documents may notify the Employer in writing at the Employer's address **indicated in the BDS.** The Employer shall respond to

any request for clarification received earlier than 21 days[14] prior to the deadline for submission of bids. Copies of the Employer's response shall be forwarded to all purchasers of the Bidding Documents, including a description of the inquiry, but without identifying its source.

10.2 Pre-bid Meeting

10.2.1 The bidder or his official representative is invited to attend a per-bid meeting, which will take place at the place and time stated in BDS.

10.2.2 The purpose of the meeting will be to clarify issues and to answer questions on any matter that may be raised at that stage.

10.2.3 The bidder is requested to submit any questions in writing or by facsimile or email to reach the Employer not later than one week before the meeting.

10.2.4 Minutes of the meeting, including the text of the questions raised (without identifying the source of inquiry) and the responses given will be transmitted without delay to all purchasers of the bidding documents. Any modification of the bidding documents listed in Sub-Clause 9.1 which may become necessary as a result of the pre-bid meeting shall be made by the Employer exclusively through the issue of an Addendum pursuant to Clause 11 and not through the minutes of the pre-bid meeting.

10.2.5. Non-attendance of the pre-bid meeting will not be a cause for disqualification of a bidder.

11. Amendment of Bidding Documents

11.1 Before the deadline for submission of bids, the Employer may modify the Bidding Documents by issuing addenda.

11.2 Any addendum thus issued shall be part of the Bidding Documents and shall be communicated in writing to all purchasers of the Bidding Documents.[15] Prospective bidders shall acknowledge receipt of each addendum in writing to the Employer.

11.3 To give prospective bidders reasonable time in which to take an addendum into account in preparing their bids, the Employer

[14] *It may be necessary to extend the deadline for submission of bids if the Employer's response results in substantial changes to the Bidding Documents. See ITB Clause 11 below.*

[15] *It is therefore important that the Employer maintain a complete and accurate list of recipients of the Bidding Documents and their addresses.*

shall extend, as necessary, the deadline for submission of bids, in accordance with ITB Sub-Clause 21.2 below.

C. Preparation of Bids

12. Language of Bid

12.1 All documents relating to the Bid shall be in the English.

13. Documents Comprising the Bid

13.1 The Bid submitted by the Bidder shall comprise the following:

(a) The Bid (in the format indicated in Section IV);

(b) Bid Security, in accordance with ITB Clause 17, if required;

(c) Priced Bill of Quantities;

(d) Qualification Information Form and Documents;

(e) Alternative offers where invited;

and any other materials required to be completed and submitted by bidders, as **specified in the BDS.**

The documents listed in Section IV, VI, and IX of sub-clause 9.1 shall be filled in without exception.

13.2 Bidders bidding for this contract together with other contracts stated in the IFB to form a package will so indicate in the bid together with any discounts offered for the award of more than one contract.

14. Bid Prices

14.1 The Contract shall be for the whole Works, as described in ITB Sub-Clause 1.1, based on the priced Bill of Quantities submitted by the Bidder.

14.2 The Bidder shall fill in rates and prices and line item total (both in figures & words) for all items of the Works described in the Bill of Quantities along with total bid price (both in figures and words). Items for which no rate or price is entered by the Bidder shall not be paid for by the Employer when executed and shall be deemed covered by the other rates and prices in the Bill of Quantities. Corrections, if any, shall be made by crossing out, initialing, dating and rewriting.

14.3 All duties, taxes, and other levies payable by the Contractor under the Contract, or for any other cause, shall be included in the rates, prices, and total Bid price submitted by the Bidder.

14.4 Bidders may like to ascertain availability of excise/custom duty

exemption benefits available in India to the contracts financed under World Bank loan/credits. They are solely responsible for obtaining such benefits which they have considered in their bid and in case of failure to receive such benefits for reasons whatsoever, the employer will not compensate the bidder (contractor). Where the bidder has quoted taking into account such benefits, he must give all information required for issue of certificates in terms of such notifications as per form attached to the Qualification Information in the bid. To the extent the employer determines the quantity indicated therein are reasonable keeping in view the bill of quantities, construction program and methodology, the certificates will be issued within 60 [sixty] days of signing of contract and no subsequent changes will be permitted. No certificate will be issued for items where no quantity/capacity of equipment is indicated in the statement. The bids which do not conform to the above provisions will be treated as non responsive and rejected. Any delay in procurement of the construction equipment/machinery/goods as a result of the above shall not be a cause for granting any extension of time."

14.5 The rates and prices quoted by the Bidder shall be subject to adjustment during the performance of the Contract if **provided for in the BDS** and SCC and the provisions of Clause 47 of the General Conditions of Contract.

15. Currencies of Bid and Payment

15.1 The unit rates and prices shall be quoted by the Bidder entirely in Indian Rupees.

16. Bid Validity

16.1 Bids shall remain valid for the period[16] **specified in the BDS.** A bid valid for a shorter period shall be rejected by the employer as non-responsive.

16.2 In exceptional circumstances, prior to the expiry of the original bid validity, the Employer may request that the bidders extend the period of validity for a specified additional period. The request and the bidders' responses shall be made in writing. If a Bid Security is requested in accordance with ITB Clause 17, it shall be extended up to 45 days after the deadline of the extended bid validity period. A Bidder may refuse the request without forfeiting the Bid Security. A Bidder agreeing to the request shall not be required or permitted to modify its Bid, except as

[16] *The period is a realistic time, usually 90 days, allowing for bid evaluation, clarifications, and the World Bank's "no objection" (where awards of Contract are subject to prior review).*

provided in ITB Clause 16.3.

16.3 In the case of contracts in which the Contract Price is fixed (not subject to price adjustment), in the event that the Employer requests and the bidder agrees to the extension of the validity period, the contract price, if the bidder is selected for award shall be the bid price corrected as follows: The price shall be increased by the factor (value of factor B specified in BDS) for each week or part of a week that has elapsed between the expiration of the initial bid validity and the date of issue of letter of acceptance to the successful bidder. Bid evaluation shall be based on the Bid Price without taking the above correction into consideration.

17. Bid Security

17.1 If required in the BDS the Bidder shall furnish, as part of its Bid, a Bid security, in original form for the amount shown in BDS for this particular work.

17.2 This bid security shall be in favour of, as specified in BDS, in one of the following forms:

- A bank guarantee issued by a nationalized/scheduled bank located in India or a reputed bank located abroad in the form given in Section VIII; or
- Certified cheque or Bank draft payable at as specified in Appendix.
- If the institution issuing the guarantee is located outside India, it shall be counter signed by a Nationalised/Scheduled bank located in India, to make it enforceable.

17.3 Bank guarantee issued as Bid security for the bid shall be valid for 45 days beyond the validity of the bid.

17.4 Any bid not accompanied by an acceptable Bid Security and not secured as indicated in Sub-Clause 17.2 and 17.3 above shall be rejected by the Employer as non-responsive.

17.5 The Bid security of unsuccessful bidders will be returned within 42 days of the end of the bid validity period specified in Sub-Clause 16.1.

The Bid Security of successful bidders will be discharged and returned when the bidder has signed the Agreement and furnished the required Performance Security.

17.6 The Bid Security may be forfeited:

(a) if a Bidder withdraws/modifies/substitutes its bid during the period of bid validity specified by the Bidder on the Bid Submission Sheet, except as provided in ITB Sub-Clause 16.2; or

(b) if the Bidder does not accept the correction of its Bid Price pursuant to ITB Sub-Clause 28.

(c) if the successful Bidder fails within the specified time to:

(i) sign the Contract Agreement; or

(ii) furnish the required performance security .

18. Alternative Proposals by Bidders

18.1 Bidders shall submit offers that comply with the requirements of the bidding documents, including the basic technical design as indicated in the drawing and specifications. Alternatives will not be considered.

19. Format and Signing of Bid

19.1 The Bidder shall prepare one original of the documents comprising the Bid as described in ITB Clause 13, bound with the volume containing the Form of Bid, and clearly marked "ORIGINAL." In addition, the Bidder shall submit copies of the Bid, in the number **specified in the BDS,** and clearly marked as "COPIES." In the event of discrepancy between them, the original shall prevail.

19.2 The original and all copies of the Bid shall be typed or written in indelible ink and shall be signed by a person or persons duly authorized to sign on behalf of the Bidder, pursuant to ITB Sub-Clause 5.3 (a). A copy of the legally valid authorization should be attached alongwith the bid. All pages of the Bid where entries or amendments have been made shall be initialed by the authorized person or persons signing the Bid.

19.3 The Bid shall contain no alterations or additions, except those to comply with instructions issued by the Employer, or as necessary to correct errors made by the Bidder, in which case such corrections shall be initialed by the person or persons signing the Bid.

19.4 The Bidder shall furnish information as described in the Form of Bid on commissions or gratuities, if any, paid or to be paid to agents relating to this Bid, and to contract execution if the Bidder is awarded the contract.

D. Submission of Bids

20. Submission, Sealing and Marking of Bids

20.1 Bidders may always submit their bids by mail or by hand. When so **specified in the BDS,** bidders shall have the option of submitting their bids electronically. Bidders submitting bids electronically shall follow the procedures **specified in the BDS.** The Bidder shall seal the original and all copies of the Bid in two inner envelopes and one outer envelope, duly marking the inner envelopes as "ORIGINAL" and "COPIES."

20.2 The inner and outer envelopes shall

(a) be addressed to the Employer at the address[17] **provided in the BDS;**

(b) bear the name and identification number of the Contract as **defined in the BDS** and SCC; and

(c) provide a warning not to open before the specified time and date for Bid opening as **defined in the BDS.**

20.3 In addition to the identification required in ITB Sub-Clause 20.2, the inner envelopes shall indicate the name and address of the Bidder to enable the Bid to be returned unopened in case it is declared late, pursuant to ITB Clause 22.

20.4 If the outer envelope is not sealed and marked as above, the Employer shall assume no responsibility for the misplacement or premature opening of the Bid.

21. Deadline for Sub-mission of Bids

21.1 Bids shall be delivered to the Employer at the address specified above no later than the time and date **specified in the BDS.**

21.2 The Employer may extend the deadline for submission of bids by issuing an amendment in accordance with ITB Clause 11, in which case all rights and obligations of the Employer and the bidders previously subject to the original deadline shall then be subject to the new deadline.

22. Late Bids

22.1 Any Bid received by the Employer after the deadline prescribed in ITB Clause 21 shall be returned unopened to the Bidder.

---

[17] *The receiving address should be an office that is staffed during normal working hours by personnel authorized to certify time and date of receipt and assure safekeeping until Bid opening. A post office address is not satisfactory. The address must be the same as the receiving address described in the Invitation for Bids.*

23. Withdrawal, Substitution and Modification of Bids

23.1 Bidders may withdraw, substitute or modify their Bids by giving notice in writing before the deadline prescribed in ITB Clause 21.

23.2 Each Bidder's withdrawal, substitution or modification notice shall be prepared, sealed, marked, and delivered in accordance with ITB Clauses 19 and 20, with the outer and inner envelopes additionally marked or "WITHDRAWAL," SUBSTITUTION," OR "MODIFICATION" as appropriate.

23.3 No Bid may be substituted or modified after the deadline for submission of Bids.

23.4 Withdrawal of a Bid between the deadline for submission of bids and the expiration of the period of Bid validity specified in the Bidding Data or as extended pursuant to ITB Sub-Clause 16.2 may result in the forfeiture of the Bid Security pursuant to ITB Clause 17.

23.5 Bidders may only offer discounts to, or otherwise modify the prices of their bids, by submitting Bid modifications in accordance with this clause or included in the initial Bid

E. Bid Opening and Evaluation

24. Bid Opening

24.1 The Employer shall open the bids, including modifications made pursuant to Clause 23, in the presence of the bidders' representatives who choose to attend at the time and in the place **specified in the BDS.** Any specific opening procedures required if electronic bidding is permitted in accordance with ITB Sub-Clause 20.1, shall be as specified in the BDS.

24.2 Envelopes marked "WITHDRAWAL" shall be opened and read out first. Bids for which an acceptable notice of withdrawal has been submitted pursuant to ITB Clause 23 shall not be opened.

24.3 The bidders' names, the Bid prices, the total amount of each Bid and of any alternative Bid (if alternatives have been requested or permitted), any discounts, Bid withdrawals, substitutions, or modifications, the presence or absence of Bid Security, if required, and such other details as the Employer may consider appropriate, shall be announced by the Employer at the opening. No bid shall be rejected at bid opening except for the late bids pursuant to ITB Clause 22. Substitution Bids and modifications submitted pursuant to ITB Clause 23 that are not opened and read out at bid opening shall not be considered for further evaluation regardless of the circumstances. Late, withdrawn and substituted

bids shall be returned un-opened to bidders

24.4 The Employer shall prepare Minutes of the Bid Opening, including the information disclosed, to those present, in accordance with ITB Sub-Clause 24.3.[18]

25. Confidentiality

25.1 Information relating to the Examination, Clarification, Evaluation, and Comparison of Bids and Recommendations for the Award of a contract shall not be disclosed to bidders or any other persons not officially concerned with such process until publication of the award to the successful Bidder has been announced pursuant to ITB Sub-Clause 34.4. Any effort by a Bidder to influence the Employer's processing of bids or award decisions may result in the rejection of its Bid. Notwithstanding the above, from the time of bid opening to the time of Contract award, if any Bidder wishes to contact the Employer on any matter related to the bidding process, it should do so in writing.

26. Clarification of Bids

26.1 To assist in the examination, evaluation, and comparison of Bids, the Employer may, at the Employer's discretion, ask any Bidder for clarification of the Bidder's Bid, including breakdown of unit rates. The request for clarification and the response shall be in writing, but no change in the price or substance of the Bid shall be sought, offered, or permitted except as required to confirm the correction of arithmetic errors discovered by the Employer in the evaluation of the Bids in accordance with ITB Clause 28.

27. Examination of Bids and Determination of Responsiveness

27.1 Prior to the detailed evaluation of Bids, the Employer shall determine whether each Bid (a) meets the eligibility criteria defined in ITB Clause 4; (b) has been properly signed; (c) is accompanied by the Security, if required; and (d) is substantially responsive to the requirements of the Bidding Documents.

27.2 A substantially responsive Bid is one which conforms to all the terms, conditions, and specifications of the Bidding Documents, without material deviation or reservation. A material deviation or reservation is one (a) which affects in any substantial way the scope, quality, or performance of the Works; (b) which limits in any substantial way, inconsistent with the Bidding Documents, the Employer's rights or the Bidder's obligations under the Contract; or (c) whose rectification would affect unfairly the competitive position of other bidders presenting substantially responsive bids.

27.3 If a Bid is not substantially responsive, it shall be rejected by the

[18] *A copy of the minutes should be sent by the Employer to the World Bank together with the Bid evaluation report, for contracts subject to prior review.*

Employer, and may not subsequently be made responsive by correction or withdrawal of the nonconforming deviation or reservation.

28. Correction of Errors

28.1 Bids determined to be substantially responsive shall be checked by the Employer for any arithmetic errors. Errors shall be corrected by the Employer as follows:

(a) where there is a discrepancy between the amounts in figures and in words, the amount in words shall govern; and

(b) where there is a discrepancy between the unit rate and the line item total resulting from multiplying the unit rate by the quantity, the unit rate as quoted shall govern.

28.2 The amount stated in the Bid shall be adjusted by the Employer in accordance with the above procedure for the correction of errors and, with the concurrence of the Bidder, shall be considered as binding upon the Bidder. If the Bidder does not accept the corrected amount, the Bid shall be rejected, and the Bid Security may be forfeited in accordance with ITB Sub-Clause 17.6 (b).

29. Currency for Bid Evaluation

The currency for bid evaluation shall be Indian Rupees only.

30. Evaluation and Comparison of Bids

30.1 The Employer shall evaluate and compare only the bids determined to be substantially responsive in accordance with ITB Clause 27.

30.2 In evaluating the bids, the Employer shall determine for each Bid the evaluated Bid price by adjusting the Bid price as follows:

(a) making any correction for errors pursuant to ITB Clause 28;

(b) making an appropriate adjustment for any other acceptable variations, deviations, or alternative offers submitted in accordance with ITB Clause 18; and

(c) making appropriate adjustments to reflect discounts or other price modifications offered in accordance with ITB Sub-Clause 23.5.

30.3 The Employer reserves the right to accept or reject any variation, deviation, or alternative offer. Variations, deviations, and alternative offers and other factors which are in excess of the requirements of the Bidding Documents or otherwise result in unsolicited benefits for the Employer shall not be taken into account in Bid evaluation.

30.4 The estimated effect of any price adjustment conditions under GCC Clause 47, during the period of implementation of the Contract, shall not be taken into account in Bid evaluation.

30.5 Where bids are invited for several lots, the Employer shall determine the application of discounts so as to minimize the combined cost of all the lots, pursuant to ITB Sub-Clause 30.2 (c).

30.6 If the Bid of the successful Bidder is seriously unbalanced in relation to the Engineer's estimate of the cost of work to be performed under the contract, the Employer may require the Bidder to produce detailed price analyses for any or all items of the Bill quantities, to demonstrate the internal consistency of those prices with the construction methods and schedule proposed. After evaluation of the price analyses, the Employer may require that the amount of the performance security set forth in Clause 35 be increased at the expense of the successful Bidder to a level sufficient to protect the Employer against financial loss in the event of default of the successful bidder under the Contract.

31. Preference for Domestic Bidders Not used

F. Award of Contract

32. Award Criteria

32.1 Subject to ITB Clause 33, the Employer shall award the Contract to the Bidder whose Bid has been determined to be substantially responsive to the Bidding Documents and who has offered the lowest evaluated Bid price, provided that such Bidder has been determined to be (a) eligible in accordance with the provisions of ITB Clause 4, and (b) qualified in accordance with the provisions of ITB Clause 5.

33. Employer's Right to Accept any Bid and to Reject any or all Bids

33.1 Notwithstanding ITB Clause 32, the Employer reserves the right to accept or reject any Bid, and to cancel the bidding process and reject all bids, at any time prior to the award of Contract, without thereby incurring any liability to the affected Bidder or bidders or any obligation to inform the affected Bidder or bidders of the grounds for the Employer's action.[19]

34. Notification of Award and Signing of Agreement

34.1 The Bidder whose Bid has been accepted shall be notified of the award by the Employer prior to expiration of the Bid validity period in writing. This letter (hereinafter and in the GCC called the "Letter of Acceptance") shall state the sum that the Employer shall pay the Contractor in consideration of the execution, completion, and maintenance of the Works by the Contractor as prescribed by the Contract (hereinafter and in the Contract called the "Contract Price").

34.2 The Letter of Acceptance shall constitute the formation of the Contract, subject to the Bidder furnishing the Performance Security in accordance with ITB Clause 35 and signing the Agreement in accordance with ITB Sub-Clause 34.3.

Publication of Award & Recourse to unsuccessful Bidders

34.3 The Agreement shall incorporate all agreements between the Employer and the successful Bidder. It shall be kept ready in the office of the Employer for the signature of the Employer and the successful Bidder, within 28 days following the Letter of Acceptance's date. Within 21 days of receipt of letter of acceptance, the successful Bidder shall sign the Agreement and deliver it to the Employer alongwith performance security in accordance with ITB Clause 35.1 and revised construction

[19] *Employers shall not reject bids or annul bidding processes, except as permitted in the Procurement Guidelines.*

methodology.

34.4 The Employer shall publish in a national website*(http://tenders.gov.in)* the results identifying the bid and lot numbers and the following information: (i) name of each bidder who submitted a bid; (ii) bid prices as read out at bid opening; (iii) name and evaluated prices of each bid that was evaluated; (iv) name of bidders whose bids were rejected and the reasons for their rejection; and (v) name of the winning bidder, and the price it offered, as well as the duration and summary scope of the contract awarded. After publication of the award, unsuccessful bidders may request in writing to the Employer for a debriefing seeking explanations for the failure of their bids. The Employer shall promptly respond in writing to any unsuccessful Bidder who, after publication of contract award requests the Employer in writing to explain on which grounds its bid was not selected.

35. Performance Security

35.1 Within 21 days after receipt of the Letter of Acceptance, the successful Bidder shall sign the contract agreement and deliver to the Employer a Performance Security in the amount stipulated in the GCC and in the form (Bank Guarantee) **stipulated in the BDS,** in Indian Rupees.

35.2 If the Performance Security is provided by the successful Bidder in the form of a Bank Guarantee or cashier's cheque/certified cheque/Bank Demand Draft, it shall be issued at the Bidder's option, by a nationalized/ scheduled bank located in India, or by a foreign bank acceptable to the Employer, through a correspondent bank located in India.

35.3 Failure of the successful Bidder to comply with the requirements of ITB Sub-Clauses 35.1 and 34.3 shall constitute sufficient grounds for cancellation of the award and forfeiture of the Bid Security and employers may resort to awarding the contract to the next lowest evaluated responsive bidder. Upon the successful Bidder's, signing of the Agreement and furnishing of the Performance Security pursuant to ITB Clause 35.1, the Employer shall promptly notify the name of the winning bidder to each unsuccessful bidder and shall discharge the Bid Securities of the unsuccessful bidders pursuant to ITB Clause 17.4.

36. Advance Payment and Security

36.1 The Employer shall provide an Advance Payment on the Contract Price as stipulated in the GCC, subject to a maximum amount, as **stated in the BDS.** The Advance Payment shall be guaranteed by a Security. Section X "Security Forms" provides a

Bank Guarantee for Advance Payment form.

37. Adjudicator /Disputes Review Expert

37.1 The Employer proposes the person **named in the BDS** to be appointed as Adjudicator under the Contract, at a daily fee **specified in the BDS,** plus reimbursable expenses. If the Bidder disagrees with this proposal, the Bidder should so state in the Bid. If, in the Letter of Acceptance, the Employer has not agreed on the appointment of the Adjudicator, the Adjudicator shall be appointed by the Appointing Authority designated in the BDS and the SCC at the request of either party.

Section II. Bidding Data Sheet

A. General	
ITB 1.1	The Employer is: USIDCL, 3/3, Industrial Area, Patel Nagar, Dehradun. The Works are: Construction of Pre-fabricated Houses in Uttarakhand. The name and identification of the contract are:- Construction of 50 Nos. of Pre-fabricated Houses in Bageshwar District of Uttarakhand. **Contract No.- 09/USIDCL- 391 /2013**
ITB 1.2	The Intended Completion Date for the whole of the Works shall be 45 days from the Date of Start.
ITB 2.1	The Borrower is Government of India.
ITB 2.1	The "World Bank" means *"International Bank for Reconstruction and Development (IBRD)"* and loan refers to a *"IBRD loan"* which, as of the date of issue of the bidding documents *"has been agreed,"* by the World Bank.
ITB 2.1	The Project is Construction of 50 Nos. of Pre-fabricated Houses in Bageshwar District of Uttarakhand. The loan/credit number is (yet to be allotted)
ITB 4.3	The list of firms debarred from participating in World Bank projects is available at: http://www.worldbank.org/debarr/.
ITB 5.3[21]	The information required from bidders in ITB Sub-Clause 5.3 is modified as follows: None.
ITB 5.3 (j)	The ceiling for sub contractor's participation is: 50%
ITB 5.4	The qualification data required from bidders in ITB Sub-Clause 5.4 are modified as follows: None.
ITB 5.5	The previous financial years are: 2012-13, 2011-12, 2010-11, 2009-10, 2008-09.
ITB 5.5 (A)	(a) Financial turnover[22]: not less than Rs. 1,80,00,000 lacs.

(b) Completion of similar work of value of Rs. 2,40,00,000 lacs. The following work will be considered as similar:-

- Construction of pre-fabricated houses.

(c) Execution of minimum quantities of major components of work in any one year.

i) Pre-fabricated structure - 1400 Sqm

(d) The minimum amount of work executed for executing similar Electrical Works in any one year shall be Rs. 5,00,000.00

(e) The minimum amount of work executed for executing similar Water Supply / Sanitary Works in any one year shall be Rs. 5,00,000.00

ITB 5.5 B

(a) The essential equipment to be made available for the Contract by the successful Bidder shall be as under:

Sl. No.	**Item of Equipment**	**No. Owned/Leased**
1	Water Tanker	2 Nos.
2	Generator of suitable capacity	1 No.
3	Battery Operated Drill machine	4 Nos.
4	Welding/ Riveting plant	2 Nos.
5	Level instrument	2 Nos.
7	Relevant plant/machinery/implements for construction of transitional shelters	As required

(b) The Key Personnel required for the project implementation are:

S. No.	Designation of Personnel	No.	Minimum Qualification	Minimum years of experience	Minimum experience in similar/building works
1.	Civil Engineer	1 (Full Time)	Diploma in Civil Engineering.	5 years	3 years

[22] @..... price level. Financial turnover and cost of completed works of previous years shall be given weightage @5% per year based on rupees value to bring them to base year price level of the financial year in which bids are received.

2.	Supervisor	2 Nos. (Full Time)	Trained in Civil Works preferably in construction of prefabricated structures.	5 years	3 years

(c) The minimum amount of liquid assets and/or credit facilities net of other contractual commitments of the successful Bidder shall be Rs. 2 Crore.

ITB 5.7	The factor N= $^{1}/_{2}$

B. Bidding Documents

ITB 10.1	The Employer's address for clarification is: Uttarakhand State Infrastructure Development Corporation Ltd., 3/3 Industrial Area, Patel Nagar, Dehradun- 248001. Uttarakhand. India. Tel: 0135-2522941 email- usidcl@gmail.com website- usidcl.gov.in
ITB 10.2	Pre-bid Meeting shall be held on 15.10.2013 at 1530 Hrs. at the address given below: Uttarakhand State Infrastructure Development Corporation Ltd., 3/3 Industrial Area, Patel Nagar, Dehradun- 248001. Uttarakhand. India. Tel: 0135-2522941 email- usidcl@gmail.com website- usidcl.gov.in

C. Preparation of Bids

ITB 13.1	Any additional materials required to be completed and submitted by the Bidders are none.
ITB 14.5	The Contract is not subject to price adjustment in accordance with GCC Clause 47.
ITB 16.1	The Bid shall be valid for 90 days.
ITB 16.3	The factor 'B' is 0.001538 per week.

ITB 17.1	Bid shall include a Bid Security in the form of FDR duly pledged in the name of MD, USIDCL/Unconditional bank guarantee issued by a nationalized/scheduled bank in favour of MD, USIDCL, payable at Dehradun. The form for bid security (bank guarantee) included in Section X, Security Forms. The Bid Security shall be in Indian rupees.
ITB 17.2	The Bid Security amount is Rs. 7.50 Lac.
ITB 19.1	The number of copies of the Bid to be completed and returned shall be two.
D. Submission of Bids	
ITB 20.1	Bidders may submit their bids electronically: No.
ITB 20.2 (a)	The Employer's address for the purpose of Bid submission is:- Uttarakhand State Infrastructure Development Corporation Ltd., 3/3 Industrial Area, Patel Nagar, Dehradun- 248001. Uttarakhand. India. Tel: 0135-2522941 email- usidcl@gmail.com website- usidcl.gov.in
ITB 20.2 (b)	Name and Identification number of the contract as given in ITB 1.1 above in this sheet.
ITB 20.2 (c)	The warning should read "DO NOT OPEN BEFORE 22.10.2013, 1730 Hrs.
ITB 21.1	The deadline for submission of bids shall be 22.10.2013, 1500 Hrs. In the event the specified date is declared as a holiday for the employer, the bids will be received upto the appointed time on the next working day.

E. Bid Opening and Evaluation	
ITB 24.1	The bid opening shall take place at: Uttarakhand State Infrastructure Development Corporation Ltd., 3/3 Industrial Area, Patel Nagar, Dehradun- 248001. Uttarakhand. India. Tel: 0135-2522941 email- usidcl@gmail.com website- usidcl.gov.in Date: 22.10.2013 Time: 1730 Hrs. In the event specified date is declared as a holiday for the employer, the bids

	will be received up to the appointed time on the next working day.
F. Award of Contract	
ITB 35.1	The Standard Form of Performance Security acceptable to the Employer shall be a Bank Guarantee.
ITB 36.1	The Advance Payment shall be limited to 10% (Ten percent) of the Contract Price.
ITB 37.1	The Adjudicator proposed by the Employer is:- Er. G.D. Raturi, Badripur Road, Opposite Asha Nursing Home, Near Jogiwala Chowk, Dehradun- 248001. The daily fee for this proposed Adjudicator shall be Rs 5000 per day. The biographical data of the proposed Adjudicator is as follows:- Education:- BSc., B.E. (Civil) Experience- 40 years Age- 62 years Nationality- Indian Present position- Retired Govt. Servant. The Appointing Authority is Chairman, State Centre, Institution of Engineers (India), Dehradun, Uttarakhand.

Section III. Eligible Countries

Eligibility for the Provision of Goods, Works and Services in Bank-Financed Procurement

1. In accordance with Para 1.8 of the Guidelines: Procurement under IBRD Loans and IDA Credits, dated May 2004, the Bank permits firms and individuals from all countries to offer goods, works and services for Bank-financed projects. As an exception, firms of a Country or goods manufactured in a Country may be excluded if:

> Para 1.8 (a) (i): as a matter of law or official regulation, the Borrower's Country prohibits commercial relations with that Country, provided that the Bank is satisfied that such exclusion does not preclude effective competition for the supply of the Goods or Works required, or
>
> Para 1.8 (a) (ii): by an Act of Compliance with a Decision of the United Nations Security Council taken under Chapter VII of the Charter of the United Nations, the Borrower's Country prohibits any import of goods from that Country or any payments to persons or entities in that Country.

2. For the information of borrowers and bidders, at the present time firms, goods and services from the following countries are excluded from this bidding:

(a) With reference to paragraph 1.8 (a) (i) of the Guidelines:
None

(b) With reference to paragraph 1.8 (a) (ii) of the Guidelines:
None

Section IV. Forms of Bid, Qualification Information, Letter of Acceptance, and Agreement

1. Contractor's Bid

*The **Bidder** shall fill in and submit this Bid form with the Bid. If the Bidder objects to the Adjudicator proposed by the Employer in the Bidding Documents, it should so state in its Bid, and present an alternative candidate, together with the candidate's daily fees and biographical data, in accordance with ITB Clause 37.*

Date: 09.10.2013

Identification No 09/USIDCL- 391 /2013
Title of Contract: Construction of 50 Nos of Pre-fabricated Houses in Bageshwar District of Uttarakhand.

To:

Uttarakhand State Infrastructure Development Corporation Ltd.,
3/3 Industrial Area, Patel Nagar,
Dehradun- 248001. Uttarakhand.
India.
Tel: 0135-2522941
email- usidcl@gmail.com
website- usidcl.gov.in

Having examined the Bidding Documents, including addenda *[insert list]*, we offer to execute the Construction of 50 Nos. of Pre-fabricated Houses in Bageshwar District of Uttarakhand, Identification No 09/USIDCL- 391 /2013 in accordance with the GCC accompanying this Bid for the Contract Price of Rs…… *[insert amount in numbers]*, Rs.……... *[insert amount in words.*

The advance payment required is:

We accept the appointment of …….*[insert name proposed in Bid Data Sheet]* as the Adjudicator.

[or]

We do not accept the appointment of …… *[insert name proposed in Bid Data Sheet]* as the Adjudicator, and propose instead that …… *[insert name]* be appointed as Adjudicator, whose daily fees and biographical data are attached.

This Bid and your written acceptance of it shall constitute a binding Contract between us. We understand that you are not bound to accept the lowest or any Bid you receive.

We hereby confirm that this Bid complies with the Bid validity and, if required, Bid Security as required by the Bidding Documents and specified in the BDS.

We, including any subcontractors or suppliers for any part of the Contract, have nationalities from eligible countries in accordance with ITB Sub-Clause 4.1;

We have no conflict of interest in accordance with ITB Sub-Clause 4.2;

Our firm, its affiliates or subsidiaries—including any subcontractors or suppliers for any part of the contract—has not been declared ineligible by the Bank, or under the Employer's country laws or official regulations, in accordance with ITB Sub-Clauses 4.3 and 4.4.

We hereby certify that we have taken steps to ensure that no person acting for us or on our behalf will engage in bribery or any collusive arrangements with competitors.

We also undertake that, in competing for (and, if the award is made to us, in executing) the above contract, we will strictly observe the laws against fraud and corruption in force in India namely "Prevention of Corruption Act 1988".

Commissions or gratuities, if any, paid or to be paid by us to agents relating to this Bid, and to contract execution if we are awarded the contract, are listed below:

Name and address of agent	Amount and Currency	Purpose of Commission or gratuity
_____	_____	_____
_____	_____	_____
_____	_____	_____

(if none, state "none")

Authorized Signature: _____
Name and Title of Signatory: _____
Name of Bidder: _____
Address: _____

2. Qualification Information

Notes on Form of Qualification Information

The information is to be filled in by individual bidders and by each member of Joint Venture in case of JV participating in the Bid. The following pages will be used for purposes of post-qualification as provided for in Clause 4 of the Instructions to Bidders. This information will not be incorporated in the Contract. Attach additional pages as necessary.

	Individual Bidders Qualification	
1	(i) Constitution or **legal status** of Bidder (ii) Place of registration: (iii) Principal place of business: (iv) Power of attorney of signatory of Bid	*[attach copy]* ……. ……. [*attach*]
	Total **annual volume of civil engineering construction work** executed and payments received in the last five years preceding the year in which bids are invited. (*Attach certificate from Chartered Accountant).*	Year (Rs. In millions) 2012 -2013 2011 -2012 2010 -2011 2009 -2010 2008 -2009

(A) Work performed as prime Contractor (*in the same name and style*) on construction works of a similar nature and volume over the last five years[23]. [*Attach certificate from the Engineer-in-charge.*]

Project Name	Name of Employer	Description of work	Contract No.	Value of contract	Date of Issue of Work Order	Stipulated Date of Completion	Actual Date of Completion	Remarks explaining reasons for Delay, if any

[23] Immediately preceding the financial year in which bids are received.

(B) Quantities of work executed as prime contractor (in the same name and style)in the last five years:[24]

Year	Name of the Work	Name of Employer*	Quantity of work performed @	Remarks* (indicate contract Ref)
			Pre-fab Structure (Sqm)	
2012 -2013 2011 -2012 2010 -2011 2009 -2010 2008 -2009				

[@ The items or work for which date is requested should tally with that specified in ITB 5.5A(c)
** Attach certificates from Engineer in-charge*]

(c) Value of Electrical & Sanitary/ Water supply works executed (ITB Clause 5.5 (A) (d) & (e)

Name of Contractor	Year	Contract No.	Name of Work	Name of Employer & Address	Value of Electrical works executed	Value of Sanitary water supply works executed

[24] Immediately preceding the financial year in which bids are received.

2.1. **Information on Bid Capacity** *(works for which bids have been submitted and works which are yet to be completed)* as on the date of bid submission.

(A) Existing commitments and on-going construction works:

Description of Works	Place & State	Contract No & Date	Name & Address of Employer	Value of Contract (Rs.In million)	Stipulated period of completion	Value of works remaining to be completed (Rs. millions)*	Anticipated Date of completion
(1)	(2)	(3)	(4)	(5)	(6)	(7)	(8)

* Enclose certificate(s) from Engineers(s)-in-charge for value of work remaining to be completed.

(B) Works for which bids already submitted & likely to be awarded – expected additional commitment.

Description of Word	Place & State	Name & Address of Employer	Estimated Value of Works (Rs.millions)	Stipulated period of completion	Date when decision is expected	Remarks, if any
(1)	(2)	(3)	(4)	(5)	(6)	(7)

2.2 **Availability of Major items of Contractor's Equipment:** List all information requested below. Refer also to Clause 5.3 (d) and Clause 5.5B (a) of the Instructions to Bidders.

Item of Equipment	Description	make	capacity	age (Years)	Condition	Number available	Owned	Leased	Purchased

2.3 **Qualifications of technical personnel proposed:** Refer also to Clause 5.3 (e) and Clause 5.5 B (b) of the Instructions to Bidders and Clause 9.1 of Part-1 General Conditions of Contract.

Position	Name	Qualification	Years of experience ….	Years of experience in proposed position			
				Pre-fab Structures	Building Works	Others	Total

2.4 Proposed sub-contractors and firms: Refer to ITB Clause 5.3(j) and GCC Clause 7.

Sections of the Works	Value of subcontract	% of Bid price	Sub-contractor (name and address)	Experience in similar work

Note : *The capability of the sub-Contractor will also be assessed (on the same lines as for the main Contractor) before according approval to him.*

2.5	Financial reports of the last five years: Balance sheets, profit and loss statements, auditors' reports, etc. List below and attach copies. …….. …….. …….. …….. ……..
2.6	Financial Resources: Evidence of access to financial resources to meet the qualification requirements [*cash in hand, lines of credit, etc.*] List below and attach copies of support documents. [*Attach a certificate from Bank in the format at the end of this section. Other. Certificate, will not be accepted*] ……... ……... ……... …….. ……..
2.7	**Banker's References**: Name, address, and telephone, telex, and facsimile numbers of banks that may provide references if contacted by the Employer. ……... ……... ……...
2.8	**Information on current litigation in which the Bidder is involved.**

Name of Other party(s) 1	Cause of dispute 2	Litigation where (Court or Arbitration) 3	Amount involved 4	Remarks regarding present status 5

2.9	**Proposed work method and schedule**: The bidder should attach descriptions, drawings, and charts as necessary, to comply with the requirements of the bidding documents. [*Refer Clause 5. 1 and 5.3(k)]*
2.10	**Statement of Compliance under the requirements of Sub-Clause 4.2 of ITB.**
2.11	**Financial Statements Summary**: To be submitted by each bidder including each members of JV.

	SUMMARY OF FINANCIAL STATEMENTS **Name of bidder/JV Member:**							
	(Equivalent Rs. Million)							
	S.No.	**Financial Information in Rupee equivalent with exchange rate at the end of concerned year**	**Actuals for Previous five years excluding the current financial year**					**Ref. of Page Nos. of Balance Sheets**
			2012-13	2011-12	2010-11	2009-10	2008-09	
	(1)	(2)	(3)	(4)	(5)	(6)	(7)	(8)
	1.	Total Assets						
	2.	Total Turnover						
	3.	Current Assets						
	4.	Current Assets + Loan & Advances						
	5.	Total Liabilities						
	6.	Current Liabilities						
	7.	Current liabilities & provision						
	8.	Profit before Interest and Tax						
	9.	Profit before Tax						
	10.	Profit after Tax						
	11.	Shareholder's Funds (Net Worth)=(Paid up equity +Reserves)-(revaluation reserves + Miscellaneous expenditure not written off)						
	12.	Depreciation						
	13.	Current Ration (2)/(5)						
	14.	Net cash accruals= Profit after Tax + depreciation						

	This information should be extracted from the Annual Financial Statements/ Balance sheets, which should be enclosed. Year 1 will be the latest year for which audited financial statements are available. Year 2 shall be the year immediately preceding year 1 and year 3 shall be the year immediately preceding Year 2.
2.12	**Additional Requirements** : Bidders should provide any additional information required to fulfill the requirement of Clause 5 of ITB.

2.13 SAMPLE FORMAT FOR EVIDENCE OF ACCESS TO OR AVAILABILITY OF CREDIT FACILITIES-* CLAUSE 5.5 [B] [c] OF ITB

BANK CERTIFICATE

This is to certify that M/s……is a reputed company with a good financial standing.

If the contract for the work, namely……..[*funded by the World Bank*] is awarded to the above firm, we shall be able to provide overdraft/credit facilities to the extent of Rs. ……..…….. to meet their working capital requirements for executing the above contract.

---Sd.---

Name of Bank

Senior Bank Manager

Address of the Bank

Form…..

(Name of the Project)

(*Declaration regarding customs/ excise duty exemption for materials/ construction equipment bought for the work*)

(*Bidder's Name and Address*)

To: ……..
(*Name of the Employer & address*)

Dear Sir:

Re: [*Name of Work*]…….
Certificate for Import/Procurement of Goods/Construction Equipment

1. We confirm that we are solely responsible for obtaining customs/excise duty waivers which we have considered in our bid and in case of failure to receive such waivers for reasons whatsoever, the employer will not compensate us.

2. We are furnishing below the information required by the Employer for issue of the necessary certificates in terms of the Government of India Central Excise Notification No.108/95 and Customs Notification No. 85/99.

3. The goods/construction equipment for which certificates are required are as under:

Items	Make/ Brand Name	Capacity [*where applicable*]	Quantity	Value	State whether it will be procured locally or imported [*if so from which country*]	Remarks regarding justification for the quantity and their usage in works.
Goods						
[a] Bitumen						
[b] Cement						
[c] Steel						
[d] Others						
Construction Equipment						

4. We agree that no modification to the above list is permitted after bids are opened.

5. We agree that the certificate will be issued only to the extent considered reasonable by the Employer for the work, based on the Bill of Quantities and the construction programme and methodology as furnished by us alongwith the bid.

6. We confirm that the above goods and construction equipment will be exclusively used for the construction of the above work and the construction equipment will not be sold or otherwise disposed of in any manner for a period of five years from the date of acquisition.

Date: _____ (*Signature*)_____

Place:_____ (*Printed Name*)_____

(*Designation*)_____

(*Common Seal*) _____

3. Letter of Acceptance

[letterhead paper of the Employer]

[The Letter of Acceptance shall be the basis for formation of the Contract as described in ITB Clauses 34 and 35. This Standard Form of Letter of Acceptance shall be filled in and sent to the successful Bidder only after evaluation of bids has been completed, subject to any review by the World Bank required under the Loan Agreement.]

[insert date]

Identification No and Title of Contract: *[insert identification number and title of the Contract]*

To: *[insert name and address of the Contractor]*

This is to notify you that your Bid dated *[insert date]* for execution of the *[insert name of the Contract and identification number, as given in the SCC]* for the Contract Price ……. *[insert amount in numbers and words]* as corrected and modified[25] in accordance with the Instructions to Bidders is hereby accepted by our Agency.

[insert one of the following (a) or (b) options]

(a) We accept that *[insert name proposed by bidder]* be appointed as the Adjudicator.[26]

(b) We do not accept that *[insert name proposed by bidder]* be appointed as Adjudicator, and by sending a copy of this Letter of Acceptance to *[insert name of the Appointing Authority]*, we are hereby requesting *[insert name]*, the Appointing Authority, to appoint the Adjudicator in accordance with ITB Clause 37.1.[27]

We note that as per your bid, you do not intend to subcontract any component of work.

[OR]

We note that as per your bid, you propose to employ M/s. …… as sub-contractor for executing ……..

---

[25] *Delete "corrected and" or "and modified" if not applicable. See Notes on Standard Form of Agreement, next page.*

[26] *To be used only if the Contractor disagrees in the Bid with the Adjudicator proposed by the Employer in the Instructions to Bidders, and has accordingly offered another candidate.*

[27] *To be used only if the Contractor disagrees in the Bid with the Adjudicator proposed by the Employer in the ITB, has accordingly offered another candidate, and the Employer does not accept the counterproposal.*

[*Delete whatever is inapplicable*]

You are hereby requested to furnish Performance Security, plus additional security for unbalanced bids in terms of ITB clause 30.6, in the form detailed in ITB Clause 35.1 for an amount of Rs. ____ within 21 days of the receipt of this letter of acceptance, valid upto 28 days from the date of expiry of Defects Liability Period i.e. upto …… and sign the contract, failing which action as stated in ITB Clause 35.3 will be taken.

We have reviewed the construction methodology submitted by you alongwith the bid in response to ITB Clause 5.3[k] and our comments are given in the attachment. You are requested to submit a revised Program including environmental management plan as per Clause 27 of General Conditions of Contract within 14 days of receipt of this letter of acceptance.

Yours faithfully,

Authorized Signature……..

Name and Title of Signatory……

Name of Agency……..

Issue of Notice to proceed with the work

(letterhead of the Employer)

_____ (*date*)

To

_____(*name and address of the Contractor)*

_____

_____

Dear Sirs:

Pursuant to your furnishing the requisite security as stipulated in ITB clause 35.1, construction methodology as stated in letter of acceptance and signing of the contract agreement for the construction of_____@ a Bid Price of Rs._____, you are hereby instructed to proceed with the execution of the said works in accordance with the contract documents.

Yours faithfully,

(Signature, name and title of signatory authorized to sign on behalf of Employer)

4. Agreement

[The Agreement shall incorporate any corrections or modifications to the Bid resulting from corrections of errors (ITB Clause 28), price adjustment during the evaluation process (ITB Sub-Clause 16.3, selection of an alternative offer (ITB Clause 18), acceptable deviations (ITB Clause 27), or any other mutually-agreeable changes allowed for in the Conditions of Contract, such as changes in key personnel, subcontractors, scheduling, and the like.]

This Agreement, made the *[insert day]* day of *[insert month]*, *[insert year]* between *[insert name and address of Employer]* (hereinafter called "the Employer") and *[insert name and address of Contractor]* (hereinafter called "the Contractor") of the other part.

Whereas the Employer is desirous that the Contractor execute *[insert name and identification number of Contract]* (hereinafter called "the Works") and the Employer has accepted the Bid by the Contractor for the execution and completion of such Works and the remedying of any defects therein at a contract price of Rs. ……

Now this Agreement witnesseth as follows:

1. In this Agreement, words and expressions shall have the same meanings as are respectively assigned to them in the Conditions of Contract hereinafter referred to, and they shall be deemed to form and be read and construed as part of this Agreement.

2. In consideration of the payments to be made by the Employer to the Contractor as hereinafter mentioned, the Contractor hereby covenants with the Employer to execute and complete the Works and remedy any defects therein in conformity in all respects with the provisions of the Contract.

3. The Employer hereby covenants to pay the Contractor in consideration of the execution and completion of the Works and the remedying of defects wherein the Contract Price or such other sum as may become payable under the provisions of the Contract at the times and in the manner prescribed by the Contract.

In Witness whereof the parties thereto have caused this Agreement to be executed the day and year first before written.

The Common Seal of *[Witness entity]*_____
was hereunto affixed in the presence of: _____

Signed, Sealed, and Delivered by the said _____
in the presence of: _____

Binding Signature of Employer *[signature of an authorized representative of the Employer]*

Binding Signature of Contractor *[signature of an authorized representative of the Contractor]*

Section V: Conditions of Contract

Table of Clauses

A. General 59
1. Definitions 59
2. Interpretation 61
3. Language and Law 62
4. Project Manager's Decisions 62
5. Delegation 62
6. Communications 62
7. Subcontracting 62
8. Other Contractors 63
9. Personnel 63
Compliance with Labour Regulations 64
10. Employer's and Contractor's Risks 65
11. Employer's Risks 65
12. Contractor's Risks 65
13. Insurance 65
14. Site Investigation Reports 66
15. Queries about the Special Conditions of Contract 66
16. Contractor to Construct the Works 67
Protection of Environment 67
17. The Works to Be Completed by the Intended Completion Date 67
18. Approval by the Project Manager 67
19. Safety 67
20. Discoveries 68
21. Possession of the Site 68
22. Access to the Site 68
23. Instructions, Inspections and Audits 68
24. Disputes 68
25. Procedure for Disputes 68
26. Replacement of Adjudicator 69

B. Time Control 69
27. Program 69
28. Extension of the Intended Completion Date 70
29. Acceleration 70
30. Delays Ordered by the Project Manager 71
31. Management Meetings 71
32. Early Warning 71

C. Quality Control 71
33. Quality Assurance 71
34. Tests 71
35. Identifying and Correction of Defects 72
36. Uncorrected Defects 72

D. Cost Control.....73
37. Bill of Quantities.....73
38. Changes in the Quantities.....73
39. Variations.....73
40. Payments for Variations.....73
41. Cash Flow Forecasts.....74
42. Payment Certificates.....74
43. Payments.....75
44. Compensation Events.....75
45. Tax.....77
46. Currencies.....77
47. Price Adjustment.....77
48. Retention.....79
49. Liquidated Damages.....80
50. Bonus.....80
51. Advance Payment.....80
Secured Advance.....81
52. Securities.....81
53. Dayworks.....81
54. Cost of Repairs.....81

E. Finishing the Contract.....81
55. Completion.....81
56. Taking Over.....81
57. Final Account.....82
58. Operating and Maintenance Manuals.....82
59. Termination.....82
60. Corrupt or Fraudulent Practices.....83
61. Payment upon Termination.....84
62 Property.....85
63. Release from Performance.....85
64. Suspension of World Bank Loan or Credit.....85

General Conditions of Contract

A. General

1. Definitions

1.1 Boldface type is used to identify defined terms.

(a) The **Adjudicator** is the person appointed jointly by the Employer and the Contractor to resolve disputes in the first instance, as provided for in GCC Clauses 24 and 25 hereunder.

(b) **Bill of Quantities** means the priced and completed Bill of Quantities forming part of the Bid.

(c) **Compensation Events** are those defined in GCC Clause 44 hereunder.

(d) The **Completion Date** is the date of completion of the Works as certified by the Project Manager, in accordance with GCC Sub-Clause 55.1.

(e) The **Contract** is the Contract between the Employer and the Contractor to execute, complete, and maintain the Works. It consists of the documents listed in GCC Clause 2.3 below.

(f) The **Contractor** is a person or corporate body whose Bid to carry out the Works has been accepted by the Employer.

(g) The **Contractor's Bid** is the completed bidding document submitted by the Contractor to the Employer.

(h) The **Contract Price** is the price stated in the Letter of Acceptance and thereafter as adjusted in accordance with the provisions of the Contract.

(i) **Days** are calendar days; months are calendar months.

(j) **Dayworks** are varied work inputs subject to payment on a time basis for the Contractor's employees and Equipment, in addition to payments for associated Materials and Plant.

(k) A **Defect** is any part of the Works not completed in accordance with the Contract.

(l) The **Defects Liability Certificate** is the certificate issued by Project Manager upon correction of defects by the Contractor.

(m) The **Defects Liability Period** is the period **named in the SCC** Sub-Clause 35.1 and calculated from the Completion Date.

(n) **Drawings** include calculations and other information provided or approved by the Project Manager for the execution of the Contract.

(o) The **Employer** is the party who employs the Contractor to carry out the Works, **as specified in the SCC.**

(p) **Equipment** is the Contractor's machinery and vehicles brought temporarily to the Site to construct the Works.

(q) The **Initial Contract Price** is the Contract Price listed in the Employer's Letter of Acceptance.

(r) The **Intended Completion Date** is the date on which it is intended that the Contractor shall complete the Works. The Intended Completion Date is **specified in the SCC**. The Intended Completion Date may be revised only by the Project Manager by issuing an extension of time or an acceleration order.

(s) **Materials** are all supplies, including consumables, used by the Contractor for incorporation in the Works.

(t) **Plant** is any integral part of the Works that shall have a mechanical, electrical, chemical, or biological function.

(u) The **Project Manager** is the person **named in the SCC** (or any other competent person appointed by the Employer and notified to the Contractor, to act in replacement of the Project Manager) who is responsible for supervising the execution of the Works and administering the Contract.

(v) **SCC** means Special Conditions of Contract

(w) The **Site** is the area **defined as such in the SCC**.

(x) **Site Investigation Reports** are those that were included in the bidding documents and are factual and interpretative reports about the surface and subsurface conditions at the Site.

(y) **Specification** means the Specification of the Works included in the Contract and any modification or addition made or approved by the Project Manager.

(z) The **Start Date** is **given in the SCC**. It is the latest date when the Contractor shall commence execution of the Works. It does not necessarily coincide with any of the Site Possession Dates.

(aa) A **Subcontractor** is a person or corporate body who has a Contract with the Contractor to carry out a part of the work in the Contract, which includes work on the Site.

(bb) **Temporary Works** are works designed, constructed, installed, and removed by the Contractor that are needed for construction or installation of the Works.

(cc) A **Variation** is an instruction given by the Project Manager which varies the Works.

(dd) The **Works** are what the Contract requires the Contractor to construct, install, and turn over to the Employer, **as defined in the SCC.**

2. Interpretation

2.1 In interpreting these GCC, singular also means plural, male also means female or neuter, and the other way around. Headings have no significance. Words have their normal meaning under the language of the Contract unless specifically defined. The Project Manager shall provide instructions clarifying queries about these GCC.

2.2 If sectional completion is **specified in the SCC**, references in the GCC to the Works, the Completion Date, and the Intended Completion Date apply to any Section of the Works (other than references to the Completion Date and Intended Completion Date for the whole of the Works).

2.3 The documents forming the Contract shall be interpreted in the following order of priority:

(a) Agreement,

(b) Letter of Acceptance,

(c) Contractor's Bid,

(d) Special Conditions of Contract,

(e) General Conditions of Contract,

(f) Specifications,

(g) Drawings,

(h) Priced bill of Quantities, and

(i) any other document **listed in the SCC** as forming part of the Contract.

3. Language and Law

3.1 The language of the Contract and the law governing the Contract are **stated in the SCC**.

3.2 Salient features of major labour and other laws that are applicable to construction industry in India are given as Appendix 1 to these General Conditions of Contract.

4. Project Manager's Decisions

4.1 Except where otherwise specifically stated, the Project Manager shall decide contractual matters between the Employer and the Contractor in the role representing the Employer.

However, if the Project Manager is required, under the rules and regulations and orders of the Employer, to obtain approval of some other authorities for specific actions, he will so obtain the approval. Provided further that any requisite approval shall be deemed to have been given by the Employer for any such authority exercised by the Project Manager.

5. Delegation

5.1 The Project Manager may delegate any of his duties and responsibilities to other people, except to the Adjudicator, after notifying the Contractor, and may cancel any delegation after notifying the Contractor.

6. Communica-tions

6.1 Communications between parties that are referred to in the Conditions shall be effective only when given in writing. A notice shall be effective only when it is delivered. All oral instructions shall be confirmed in writing in seven working days.

7. Subcontracting

7.1 The Contractor may subcontract with the approval of the Project Manager upto the ceiling specified in Contract Data, but may not assign the Contract without the approval of the Employer in writing. Subcontracting shall not alter the Contractor's obligations.

7.2 The Project Manager should satisfy himself before recommending to the Employer whether:

a) the circumstances warrant such sub-contracting; and,

b) the sub-Contractor so proposed for the Work possesses the experience, qualifications and equipment necessary for the job proposed to be entrusted to him in proportion to the quantum of Works to be sub-contracted.

7.3 If payments are proposed to be made directly to that sub-contractor, this should be subject to specific authorization by the prime contractor so that his arrangement does not alter the contractor's liability or obligations under the contract.

7.4 The Contractor shall not be required to obtain any consent from the Employer for:

(a) the sub-contracting of any part of the Works for which the Sub-Contractor is already named in the contract;

(b) the provision for labour, or labour component, and,

(c) the purchase of materials which are in accordance with the standards specified in the contract.

8. Other Contractors

8.1 The Contractor shall cooperate and share the Site with other contractors, public authorities, utilities, and the Employer between the dates given in the Schedule of other Contractors, as **referred to in the SCC.** The Contractor shall also provide facilities and services for them as described in the Schedule. The Employer may modify the Schedule of Other Contractors, and shall notify the Contractor of any such modification.

9. Personnel

9.1 The Contractor shall employ the key personnel named in the Schedule of Key Personnel, as **referred to in the SCC,** to carry out the functions stated in the Schedule or other personnel approved by the Project Manager. The Project Manager shall approve any proposed replacement of key personnel only if their relevant qualifications and abilities are substantially equal to or better than those of the personnel listed in the Schedule.

9.2 The Project Manager may require the Contractor to remove from the Site of Works, a member of the Contractor's staff or his work force, who:

(a) persists in any misconduct or lack of care,

(b) carries out duties incompetently or negligently,

(c) fails to conform with any provisions of the Contract, or

(d) persists in any conduct which is prejudicial to safety, health, or the protection of the environment.

The contractor shall ensure that the person leaves the site within seven days and has no further connection with the work in the contract. The Contractor shall appoint a suitable replacement within 28 days or earlier as may be agreed to between the Project manager and the Contractor.

9.3 The Contractor shall not employ any retired Gazetted officer who has either not completed two years after the date of retirement or has not obtained permission from the Government authorities for employment with the Contractor[28].

9.4 The Contractor shall, unless otherwise provided in the Contract, make his own arrangements for the engagement of all staff and labour, local or other, and for their payment, housing, feeding and transport. The Contractor shall, if required by the Project Manager, deliver to the Project Manager a return in detail, in such form and at such intervals as the Project Manager may prescribe, showing the staff and the numbers of the several classes of labour from time to time employed by the Contractor on the Site and such other information as the Project Manager may require.

Compliance with Labour Regulations

9.5 During continuance of the Contract, the Contractor and his Sub-Contractors shall abide at all times by all existing labour enactments and rules made there under, regulations, notifications and bye laws of the State or Central Government or local authority and any other labour laws (including rules), regulations, bye laws that may be passed or notification that may be issued under any labour law prevailing on the Base Date either by the State or the Central Government or the local authority. The Contractor shall keep the Employer indemnified in case any action is taken against the Employer by the competent authority on account of contraventions including amendments. If the Employer is caused to pay or reimburse, such amounts as may be necessary to cause or observe, or for non-observance of the provisions stipulated in the notifications/bye laws/Acts/Rules/regulations including amendments, if any, on the part of the Contractor, the Project Manager/ Employer shall have the right to deduct any money due to the Contractor including his amount of performance security. The Employer/ Project Manager shall also have right to recover from the Contractor any sum required or estimated to be required for

[28] Based on Government Directives.

making good the loss or damage suffered by the Employer.

9.6 The employees of the Contractor and the Sub-Contractor in no case shall be treated as the employees of the Employer at any point of time.

9.7 The Contractor shall duly comply with the provisions of the Apprentices Act 1961 (III of 1961) and the rules made there under, and comply, failure or neglect to shall be subject to all liabilities and penalties provided in the said Act and Rules.

10. Employer's and Contractor's Risks

10.1 The Employer carries the risks which this Contract states are Employer's risks, and the Contractor carries the risks which this Contract states are Contractor's risks.

10.2 Irrespective of the Employer's or Contractor's Risk the Contractor shall continue with the works as are appropriate and as directed by the Project Manager.

11. Employer's Risks

11.1 From the Start Date until the Defects Liability Certificate has been issued, the following are Employer's risks:

(a) The risk of personal injury, death, or loss of or damage to property (excluding the Works, Plant, Materials, and Equipment), which are due to

(i) use or occupation of the Site by the Works or for the purpose of the Works, which is the unavoidable result of the Works or

(ii) negligence, breach of statutory duty, or interference with any legal right by the Employer or by any person employed by or contracted to him except the Contractor.

(b) The risk of damage to the Works, Plant, Materials, and Equipment to the extent that it is due to a fault of the Employer or in the Employer's design, or due to war or radioactive contamination directly affecting the country where the Works are to be executed.

12. Contractor's Risks

12.1 From the Starting Date until the Defects Liability Certificate has been issued, the risks of personal injury, death, and loss of or damage to property (including, without limitation, the Works, Plant, Materials, and Equipment) which are not Employer's risks are Contractor's risks.

13. Insurance

13.1 The Contractor shall provide, in the joint names of the Employer and the Contractor, insurance cover from the Start Date to the

end of the Defects Liability Period, in the amounts and deductibles **stated in the SCC** for the following events which are due to the Contractor's risks:

(a) loss of or damage to the Works, Plant, and Materials;

(b) loss of or damage to Equipment;

(c) loss of or damage to property (except the Works, Plant, Materials, and Equipment) in connection with the Contract; and

(d) personal injury or death.

13.2 Policies and certificates for insurance shall be delivered by the Contractor to the Project Manager for the Project Manager's approval before the Start Date. All such insurance shall provide for compensation to be payable in the types and proportions of currencies required to rectify the loss or damage incurred.

13.3 If the Contractor does not provide any of the policies and certificates required, the Employer may effect the insurance which the Contractor should have provided and recover the premiums the Employer has paid from payments otherwise due to the Contractor or, if no payment is due, the payment of the premiums shall be a debt due.

13.4 Alterations to the terms of an insurance shall not be made without the approval of the Project Manager.

13.5 Both parties shall comply with any conditions of the insurance policies.

14. Site Investigation Reports

14.1 The Contractor, in preparing the Bid, shall rely on any Site Investigation Reports **referred to in the SCC,** supplemented by any information available to the Bidder.

15. Queries about the Special Conditions of Contract

15.1 The Project Manager shall clarify queries on the **SCC.**

16. Contractor to Construct the Works

16.1 The Contractor shall construct and install the Works in accordance with the Specifications and Drawings and as per instructions of Project Manager.

16.2.1 The Contractor shall take all reasonable steps to protect the environment on and off the Site and to avoid damage or nuisance to persons or to property of the public or others resulting from pollution, noise or other cause arising as a consequence of his methods of operation.

Protection of Environment

16.2.2 During continuance of the contract, the contractor and his sub-contractors shall abide at all times by all existing enactments on environmental protection and rules made thereunder, regulations, notifications and by-laws of the Sate or Central Government, or local authorities and other law, bye-law, regulations that may be passed or notification that may be issued in this respect in future by the State or Central Government or the local authority. Salient features of the major laws are given in the attachment, Appendix 1 to there General conditions of contract.

17. The Works to Be Completed by the Intended Completion Date

17.1 The Contractor may commence execution of the Works on the Start Date and shall carry out the Works in accordance with the Program submitted by the Contractor, as updated with the approval of the Project Manager, and complete them by the Intended Completion Date.

18. Approval by the Project Manager

18.1 The Contractor shall submit Specifications and Drawings showing the proposed Temporary Works to the Project Manager, who is to approve them if they comply with the Specifications and Drawings.

18.2 The Contractor shall be responsible for design of Temporary Works.

18.3 The Project Manager's approval shall not alter the Contractor's responsibility for design of the Temporary Works.

18.4 The Contractor shall obtain approval of third parties to the design of the Temporary Works, where required.

18.5 All Drawings prepared by the Contractor for the execution of the temporary or permanent Works, are subject to prior approval by the Project Manager before this use.

19. Safety

19.1 The Contractor shall be responsible for the safety of all activities

on the Site.

20. Discoveries

20.1 Anything of historical or other interest or of significant value unexpectedly discovered on the Site shall be the property of the Employer. The Contractor shall notify the Project Manager of such discoveries and carry out the Project Manager's instructions for dealing with them.

21. Possession of the Site

21.1 The Employer shall give possession of all parts of the Site to the Contractor. If possession of a part is not given by the date **stated in the SCC,** the Employer shall be deemed to have delayed the start of the relevant activities, and this shall be a Compensation Event.

22. Access to the Site

22.1 The Contractor shall allow the Project Manager and any person authorized by the Project Manager access to the Site and to any place where work in connection with the Contract is being carried out or is intended to be carried out.

23. Instructions, Inspections and Audits

23.1 The Contractor shall carry out all instructions of the Project Manager which comply with the applicable laws where the Site is located.

23.2 The Contractor shall permit the Bank and/or persons appointed by the Bank to inspect the Site and/or the accounts and records of the Contractor and its sub-contractors relating to the performance of the Contract, and to have such accounts and records audited by auditors appointed by the Bank if required by the Bank. The Contractor's attention is drawn to Sub-Clause 60.1 [Corrupt or Fraudulent Practices] which provides, inter alia, that acts intended to materially impede the exercise of the Bank's inspection and audit rights provided for under Sub-Clause 23.2 constitute a prohibited practice subject to contract termination (as well as to a determination of ineligibility under the Procurement Guidelines).

24. Disputes

24.1 If the Contractor believes that a decision taken by the Project Manager was either outside the authority given to the Project Manager by the Contract or that the decision was wrongly taken, the decision shall be referred to the Adjudicator within 14 days of the notification of the Project Manager's decision.

25. Procedure for Disputes

25.1 The Adjudicator should be in position before "notice to proceed with work" is issued to the contractor and an agreement should be signed with the Adjudicator jointly by Employer/Contractor in the form attached – Appendix 3

25.2 The Adjudicator shall give a decision in writing within 28 days

of receipt of a notification of a dispute.

25.3 The Adjudicator shall be paid daily at the **rate specified in the BDS and SCC,** together with reimbursable expenses of the types specified in the Contract Data, and the cost shall be divided equally between the Employer and the Contractor. Whatever decision is reached by the Adjudicator, either party may refer a decision of the Adjudicator to an Arbitrator within 28 days of the Adjudicator's written decision. If neither party refers the dispute to arbitration within the above 28 days, the Adjudicator's decision shall be final and binding.

25.4 The arbitration shall be conducted in accordance with the arbitration procedures published by the institution named and in the place specified **in the SCC.**

The Arbitrators shall give a decision in writing within 120 days of start of the proceedings except otherwise agreed to by the Parties. The Arbitrators shall entertain only those issues which have been earlier referred to the Adjudicator and either party is dissatisfied with the decision given by the Adjudicator.

26. Replacement of Adjudicator

26.1 Should the Adjudicator resign or die, or should the Employer and the Contractor agree that the Adjudicator is not functioning in accordance with the provisions of the Contract, a new Adjudicator shall be jointly appointed by the Employer and the Contractor. In case of disagreement between the Employer and the Contractor, within 30 days, the Adjudicator shall be designated by the Appointing Authority **designated in the SCC** at the request of either party, within 14 days of receipt of such request.

B. Time Control

27. Program

27.1 Within the time **stated in the SCC**, after the date of the Letter of Acceptance, the Contractor shall submit to the Project Manager for approval, a revised Program (*revising the program given along with bid earlier*) including Environmental Management Plan showing the general methods, arrangements, order, and timing for all the activities in the Works.

27.2 An update of the Program shall be a program showing the actual progress achieved on each activity and the effect of the progress achieved on the timing of the remaining work, including any changes to the sequence of the activities.

27.3 The Contractor shall submit to the Project Manager for approval an updated Program at intervals no longer than the period **stated in the SCC.** If the Contractor does not submit an updated Program within this period, the Project Manager may withhold the amount **stated in the SCC** from the next payment certificate and continue to withhold this amount until the next payment after the date on which the overdue Program has been submitted.

27.4 The Project Manager's approval of the Program shall not alter the Contractor's obligations. The Contractor may revise the Program and submit it to the Project Manager again at any time. A revised Program shall show the effect of Variations and Compensation Events.

27.5 The Contractor shall furnish monthly progress reports as directed by the Project Engineer by 7th of the succeeding month. The report shall include charts and detailed descriptions of the progress of identified activities, photographs showing status of progress at site, records of Contractor's personnel and equipment, Quality Assurance documents, comparison of actual and planned progress as per program.

28. Extension of the Intended Completion Date

28.1 The Project Manager shall extend the Intended Completion Date if a Compensation Event occurs or a Variation is issued which makes it impossible for Completion to be achieved by the Intended Completion Date without the Contractor taking steps to accelerate the remaining work, which would cause the Contractor to incur additional cost.

28.2 The Project Manager shall decide whether and by how much to extend the Intended Completion Date within 21 days of the Contractor asking the Project Manager for a decision upon the effect of a Compensation Event or Variation and submitting full supporting information. If the Contractor has failed to give early warning of a delay or has failed to cooperate in dealing with a delay, the delay by this failure shall not be considered in assessing the new Intended Completion Date.

29. Acceleration

29.1 When the Employer wants the Contractor to finish before the Intended Completion Date, the Project Manager shall obtain priced proposals for achieving the necessary acceleration from the Contractor. If the Employer accepts these proposals, the Intended Completion Date shall be adjusted accordingly and confirmed by both the Employer and the Contractor.

29.2 If the Contractor's priced proposals for an acceleration are accepted by the Employer, they are incorporated in the Contract

Price and treated as a Variation.

30. Delays Ordered by the Project Manager

30.1 The Project Manager may instruct the Contractor to delay the start or progress of any activity within the Works.

31. Management Meetings

31.1 Either the Project Manager or the Contractor may require the other to attend a management meeting. The business of a management meeting shall be to review the plans for remaining work and to deal with matters raised in accordance with the early warning procedure.

31.2 The Project Manager shall record the business of management meetings and provide copies of the record to those attending the meeting and to the Employer. The responsibility of the parties for actions to be taken shall be decided by the Project Manager either at the management meeting or after the management meeting and stated in writing to all who attended the meeting.

32. Early Warning

32.1 The Contractor shall warn the Project Manager at the earliest opportunity of specific likely future events or circumstances that may adversely affect the quality of the work, increase the Contract Price, or delay the execution of the Works. The Project Manager may require the Contractor to provide an estimate of the expected effect of the future event or circumstance on the Contract Price and Completion Date. The estimate shall be provided by the Contractor as soon as reasonably possible.

32.2 The Contractor shall cooperate with the Project Manager in making and considering proposals for how the effect of such an event or circumstance can be avoided or reduced by anyone involved in the work and in carrying out any resulting instruction of the Project Manager.

C. Quality Control

33. Quality Assurance

33.1 The Contractor shall institute Quality Assurance (QA) and Quality Control (QC) systems in accordance with Quality Assurance Plan to demonstrate compliance with the requirements of the Contract as approved by the Project Manager.

33.2 Compliance with the QA/QC systems shall not relieve the Contractor of any of his duties obligations or responsibilities under the Contract.

34. Tests

34.1 The Contractor shall provide all apparatus, assistance, documents

and other information, electricity, equipment, fuel, consumables, instruments, labour, materials, and suitably qualified and experienced staff, as are necessary to carry out the specified tests efficiently.

34.2 If the Project Manager instructs the Contractor to carry out a test not specified in the Specification to check whether any work has a Defect and the test shows that it does, the Contractor shall pay for the test and any samples. If there is no Defect, the test shall be a Compensation Event.

35. Identifying and Correction of Defects

35.1 The Project Manager shall check the Contractor's work and notify the Contractor of any Defects that are found. Such checking shall not affect the Contractor's responsibilities. The Project Manager may instruct the Contractor to search for a Defect and to uncover and test any work that the Project Manager considers may have a Defect.

35.2 The contractor shall permit the Employer's Technical auditor to check the contractor's work and notify the Project Manager and Contractor of any defects that are found. Such a check shall not affect the Contractor's or the Project Manager's responsibility as defined in the Contract Agreement.

35.3 The Project Manager shall give notice to the Contractor of any Defects before the end of the Defects Liability Period, which begins at Completion, and is **defined in the SCC.** The Defects Liability Period shall be extended for as long as Defects remain to be corrected.

35.4 Every time notice of a Defect is given, the Contractor shall correct the notified Defect within the length of time specified by the Project Manager's notice.

36. Uncorrected Defects

36.1 If the Contractor has not corrected a Defect within the time specified in the Project Manager's notice, the Project Manager shall assess the cost of having the Defect corrected, and the Contractor shall pay this amount.

Note: Where in certain cases, the technical specifications provide for acceptance of works within specified tolerance limits at reduced rates, Engineer will certify payments to Contractor accordingly.

D. Cost Control

37. Bill of Quantities

37.1 The Bill of Quantities shall contain items for the construction, installation, testing, and commissioning work to be done by the Contractor.

37.2 The Bill of Quantities is used to calculate the Contract Price. The Contractor is paid for the quantity of the work done at the rate specified in the Bill of Quantities for each item.

38. Changes in the Quantities

38.1 If the final quantity of the work done differs from the quantity in the Bill of Quantities for the particular item by more than 25 percent, provided the change exceeds 1 percent of the Initial Contract Price, the Project Manager shall adjust the rate to allow for the change.

(a) If the quantity of work executed exceeds the quantity of the item in BOQ beyond the higher specified limit the Project Manager shall fix the rate to be applied for the additional quantity of the work executed.

(b) If the quantity of work executed less than the quantity of the item in BOQ lesser than the lower specified limit, the Project Manager shall fix the rate to be applied for whole of the quantity of the work so executed.

38.2 The Project Manager shall not adjust rates from changes in quantities if thereby the Initial Contract Price is exceeded by more than 15 percent, except with the prior approval of the Employer.

38.3 If requested by the Project Manager, the Contractor shall provide the Project Manager with a detailed cost breakdown of any rate in the Bill of Quantities.

39. Variations

39.1 All Variations shall be included in updated Programs produced by the Contractor.

40. Payments for Variations

40.1 The Contractor shall provide the Project Manager with a quotation [*with breakdown of unit rates*]for carrying out the Variation when requested to do so by the Project Manager. The Project Manager shall assess the quotation, which shall be given within seven days of the request or within any longer period stated by the Project Manager and before the Variation is ordered.

40.2 If the work in the Variation corresponds with an item description in the Bill of Quantities and if, in the opinion of the Project

Manager, the quantity of work above the limit stated in Sub-Clause 38.1 or the timing of its execution do not cause the cost per unit of quantity to change, the rate in the Bill of Quantities shall be used to calculate the value of the Variation. If the cost per unit of quantity changes, or if the nature or timing of the work in the Variation does not correspond with items in the Bill of Quantities, the quotation by the Contractor shall be in the form of new rates for the relevant items of work.

40.3 If the Contractor's quotation is unreasonable, [*or if contractor fails to provide the Project Manager with a quotation within a reasonable time specified by Project Manager in accordance with GCC40.1*] the Project Manager may order the Variation and make a change to the Contract Price, which shall be based on the Project Manager's own forecast of the effects of the Variation on the Contractor's costs.

40.4 If the Project Manager decides that the urgency of varying the work would prevent a quotation being given and considered without delaying the work, no quotation shall be given and the Variation shall be treated as a Compensation Event.

40.5 The Contractor shall not be entitled to additional payment for costs that could have been avoided by giving early warning.

41. Cash Flow Forecasts

41.1 When the Program is updated, the Contractor shall provide the Project Manager with an updated cash flow forecast. The cash flow forecast shall be in Indian Rupees.

42. Payment Certificates

42.1 The Contractor shall submit to the Project Manager monthly statements of the estimated value of the work executed less the cumulative amount certified previously along with details of measurement of the quantity of works executed in a tabular form approved by the Project Manager.

42.2 The Project Manager shall check the details given in the Contractor's monthly statement and within 14 days certify the amounts to be paid to the Contractor after taking into account any credit or debit for the month in question in respect of materials for the works in the relevant amount and under conditions set forth in GCC Sub-Clause 51.4 *[Secured Advance]*

42.3 The value of work executed shall be determined by the Project Manager after due check measurement of the quantities claimed as executed by the contractor.

42.4 The value of work executed shall comprise the value of the

quantities of the items in the Bill of Quantities completed.

42.5 The value of work executed shall include the valuation of Variations and Compensation Events.

42.6 The Project Manager may exclude any item certified in a previous certificate or reduce the proportion of any item previously certified in any certificate in the light of later information.

43. Payments

43.1 Payments shall be adjusted for deductions for advance payments, retention other recoveries in terms of contract & taxes to be deducted at source [TDS] as per applicable law.. The Employer shall pay the Contractor the amounts certified by the Project Manager within 28 days of the date of each certificate. If the Employer makes a late payment, the Contractor shall be paid interest on the late payment in the next payment. Interest shall be calculated from the date by which the payment should have been made up to the date when the late payment is made at 6% per annum.

43.2 If an amount certified is increased in a later certificate or as a result of an award by the Adjudicator or an Arbitrator, the Contractor shall be paid interest upon the delayed payment as set out in this clause. Interest shall be calculated from the date upon which the increased amount would have been certified in the absence of dispute.

43.3 Items of the Works for which no rate or price has been entered in shall not be paid for by the Employer and shall be deemed covered by other rates and prices in the Contract.

44. Compensation Events

44.1 The following shall be Compensation Events:

(a) The Employer does not give access to a part of the Site by the Site Possession Date pursuant to GCC Sub-Clause 21.1.

(b) The Employer modifies the Schedule of Other Contractors in a way that affects the work of the Contractor under the Contract.

(c) The Project Manager orders a delay or does not issue Drawings, Specifications, or instructions required for execution of the Works on time.

(d) The Project Manager instructs the Contractor to uncover or to carry out additional tests upon work, which is then found

to have no Defects.

(e) The Project Manager unreasonably does not approve a subcontract to be let.

(f) Ground conditions are substantially more adverse than could reasonably have been assumed before issuance of the Letter of Acceptance from the information issued to bidders (including the Site Investigation Reports), from information available publicly and from a visual inspection of the Site.

(g) The Project Manager gives an instruction for dealing with an unforeseen condition, caused by the Employer, or additional work required for safety or other reasons.

(h) Other contractors, public authorities, utilities, or the Employer does not work within the dates and other constraints stated in the Contract, and they cause delay or extra cost to the Contractor.

(i) The advance payment is delayed.

(j) The effects on the Contractor of any of the Employer's Risks.

(k) The Project Manager unreasonably delays issuing a Certificate of Completion.

(l) Other compensation events, listed in SCC or mentioned in contract.

44.2 If a Compensation Event would cause additional cost or would prevent the work being completed before the Intended Completion Date, the Contract Price shall be increased and/or the Intended Completion Date shall be extended. The Project Manager shall decide whether and by how much the Contract Price shall be increased and whether and by how much the Intended Completion Date shall be extended.

44.3 As soon as information demonstrating the effect of each Compensation Event upon the Contractor's forecast cost has been provided by the Contractor, it shall be assessed by the Project Manager, and the Contract Price shall be adjusted accordingly. If the Contractor's forecast is deemed unreasonable, the Project Manager shall adjust the Contract Price based on the Project Manager's own forecast. The Project Manager shall assume that the Contractor shall react competently and promptly to the event.

44.4 The Contractor shall not be entitled to compensation to the extent that the Employer's interests are adversely affected by the Contractor's not having given early warning or not having cooperated with the Project Manager.

45. Tax

45.1 The rates quoted by the Contractor shall be deemed to be inclusive of the Vat, sales and other taxes that the Contractor will have to pay for the performance of this Contract. The Employer will perform such duties in regard to the deduction of such taxes at source [TDS] as per applicable law.

46. Currencies

46.1 All payments shall be made in Indian Rupees.

47. Price Adjustment

47.1 Contract price shall be adjusted for increase or decrease in rates and price of labour, materials, fuels and lubricants and other inputs to the works in accordance with the principles and procedures outlined below. A table of adjustment data is included in the SCC which indicates the coefficients of various inputs and the sources of indices for various schedules of BOQ. If the SCC does not include a table of adjustment data this sub clause shall not apply and there shall be no price adjustment.

(a) The price adjustment according to sub para (d) below, shall apply for the work done from the start date given in the SCC up to the end of the Intended Completion Date. If there is delay in completion beyond such date for reasons attributable to the contractor, the Price Adjustment for the work carried out during such period, for reasons attributable to the Contractor, shall be regulated by sub-para (g) below.

(b) The Contract Price shall be adjusted to take account of any increase or decrease in cost after the base date, which affect the Contractor in performance of obligations under the Contract.

(c) The total value (R) of the work done during the specified period[GCC 42.1]shall be as under:

$R = SUN (R_{S1} + R_{S2} + R_{S3} + \ldots\ldots R_{Sn})$,

Where,

'R_{sn}' is the value of work done to which the price adjustment shall be applied for the relevant schedule of Bill of Quantities (BOQ) specified in S.C.C during the specified period, and represented as under:

$R_{sn} = (V_{sn} + S_{sn})$ minus (amount of secured advance recovered in the same period + value of works executed under variations for which price adjustments will be worked separately based on terms mutually agreed between the Project Engineer and the Contractor)

where,

V_{sn} is the total value of work done during the specified period for the respective schedule of BOQ, and

S_{sn} is the secured advance paid during the specified period for the respective schedule of BOQ,

(d) The adjustment to be applied to the amount otherwise payable to the Contractor, as valued in accordance with the appropriate schedule of BOQ and certified in Payment Certificates, shall be determined from formulae which shall be of the following general type:

$P_n = a + b\ L_n/L_o + c\ E_n/E_o + d\ M_n/M_o + \ldots\ldots\ldots$

where,

"P_n" is the adjustment multiplier to be applied to the estimated contract value of the work carried out in period "n", this period being a month unless otherwise stated in the SCC.

"a" is a fixed coefficient, stated in the relevant table of adjustment data, representing the non-adjustable portion in contractual payments;

"b", "c", "d",… are coefficients representing the estimated proportion of each cost element related to the execution of the Works, as stated in the relevant table of adjustment data; such tabulated cost elements may be indicative of resources such as labour, equipment and materials;

"L_n"[*Labour*], "E_n"[*Equipment*], "M_n"[*Material*], …. are the current cost indices or reference prices for period "n", each of which is applicable to the relevant tabulated cost element [*Labour, Equipment, Steel, Cement, Fuel/Lubricants, Bitumen, others*] on the date, specified in the Table-2 of Adjustment Data, prior to the last day of the period (to which the particular Payment Certificate relates); and

"L_o", "E_o", "M_o", ….are the base cost indices or reference prices, expressed in the relevant currency of payment, each

of which is applicable to the relevant tabulated cost element on the Base Date.

(e) The cost indices or reference prices stated in the tables of adjustment data given in SCC shall be used. The base date shall be date of opening of bids.

(f) If the Contractor fails to complete the Works within the Intended Completion date, adjustment of prices thereafter shall be made using either:

(i) index or price applicable for each cost element tabulated in the tables of adjustment data on the specified date prior to the expiry of the Intended Completion Date, or

(ii) the current index or price applicable for the period in question whichever is more favourable to the Employer.

(g) The weightings (coefficients) for each of the factors of cost stated in the table(s) of adjustment data shall only be varied by the Project Manager if they have been rendered unreasonable, unbalanced or inapplicable, as a result of Variations.

(h) Unless otherwise stated in the S.C.C., the Price adjustment shall be done in each monthly IPC. The coefficients and indices are given in the Tables of Adjustment Data in Contract data.

To the extent that full compensation for any rise or fall in costs to the contractor is not covered by the provisions of this or other clauses in the contract, the unit rates and prices included in the contract shall be deemed to include amounts to cover the contingency of such other rise or fall in costs.

48. Retention

48.1 The Employer shall retain from each payment due to the Contractor the proportion **stated in the SCC** until Completion of the whole of the Works.

48.2 On completion of the whole of the Works, half the total amount retained shall be repaid to the Contractor and half when the Defects Liability Period has passed and the Project Manager has certified that all Defects notified by the Project Manager to the Contractor before the end of this period have been corrected.

48.3 On completion of the whole Works, the Contractor may

substitute retention money (balance half) with an "on demand" Bank guarantee.

49. Liquidated Damages

49.1 The Contractor shall pay liquidated damages to the Employer at the rate per day **stated in the SCC** for each day that the Completion Date is later than the Intended Completion Date. The total amount of liquidated damages shall not exceed the amount **defined in the SCC.** The Employer may deduct liquidated damages from payments due to the Contractor.

49.1.1 Time is the essence of the contract and payment or deduction of liquidated damages shall not relieve the contractor from his obligation to complete the work as per agreed construction program and milestones, or from any of the other contractor's obligations and liabilities under the contract.

49.2 If the Intended Completion Date is extended after liquidated damages have been paid, the Project Manager shall correct any overpayment of liquidated damages by the Contractor by adjusting the next payment certificate. The Contractor shall be paid interest on the overpayment, calculated from the date of payment to the date of repayment, at the rates specified in GCC Sub-Clause 43.1.

50. Bonus

Not used.

51. Advance Payment

51.1 The Employer shall make advance payment to the Contractor of the amounts **stated in the SCC** by the date **stated in the SCC,** against provision by the Contractor of an Unconditional Bank Guarantee in a form and by a bank acceptable to the Employer in amounts and currencies equal to the advance payment. The Guarantee shall remain effective until the advance payment has been repaid, but the amount of the Guarantee can be progressively reduced by the amounts repaid by the Contractor. Interest shall not be charged on the advance payment.

51.2 The Contractor is to use the advance payment only to pay for Equipment, Plant, Materials, and mobilization expenses required specifically for execution of the Contract. The Contractor shall demonstrate that advance payment has been used in this way by supplying copies of invoices or other documents to the Project Manager.

51.3 The advance payment shall be repaid by deducting proportionate amounts from payments otherwise due to the Contractor, following the schedule of completed percentages of the Works on a payment basis. No account shall be taken of the advance

(mobilization & equipment) payment or its repayment in assessing valuations of work done, Variations, price adjustments, Compensation Events, or Liquidated Damages.

Secured Advance

51.4 The Engineer shall make advance payment in respect of materials intended for but not yet incorporated in the Works in accordance with conditions stipulated in the SCC.

52. Securities

52.1 The Performance Security shall be provided to the Employer no later than the date specified in the Letter of Acceptance and shall be issued in an amount **specified in the SCC,** by a bank or surety acceptable to the Employer, and denominated in Indian Rupees. The Performance Security shall be valid until a date 28 days from the date of expiry of Defects Liability Period and the additional security for unbalanced bids shall be valid until a date 28 days from the date of issue of the certificate of completion.

53. Dayworks

Not used

54. Cost of Repairs

54.1 Loss or damage to the Works or Materials to be incorporated in the Works between the Start Date and the end of the Defects Correction periods shall be remedied by the Contractor at the Contractor's cost if the loss or damage arises from the Contractor's acts or omissions.

E. Finishing the Contract

55. Completion

55.1 The Contractor shall request the Project Manager to issue a certificate of Completion of the Works, and the Project Manager shall do so upon deciding that the work is completed.

56. Taking Over

56.1 The Employer shall take over the Site and the Works within seven days of the Project Manager's issuing a certificate of Completion.

57. Final Account

57.1 The Contractor shall supply the Project Manager with a detailed account of the total amount that the Contractor considers payable under the Contract before the end of the Defects Liability Period. The Project Manager shall issue a Defects Liability Certificate and certify any final payment that is due to the Contractor within 56 days of receiving the Contractor's account if it is correct and complete. If it is not, the Project Manager shall issue within 56 days a schedule that states the scope of the corrections or additions that are necessary. If the Final Account is still unsatisfactory after it has been resubmitted, the Project Manager shall decide on the amount payable to the Contractor and issue a payment certificate within 56 days of receiving the contracts revised account.

58. Operating and Maintenance Manuals

58.1 If "as built" Drawings and/or operating and maintenance manuals are required, the Contractor shall supply them by the dates **stated in the SCC.**

58.2 If the Contractor does not supply the Drawings and/or manuals by the dates **stated in the SCC,** or they do not receive the Project Manager's approval, the Project Manager shall withhold the amount **stated in the SCC** from payments due to the Contractor.

59. Termination

59.1 The Employer or the Contractor may terminate the Contract if the other party causes a fundamental breach of the Contract.

59.2 Fundamental breaches of Contract shall include, but shall not be limited to, the following:

(a) the Contractor stops work for 28 days when no stoppage of work is shown on the current Program and the stoppage has not been authorized by the Project Manager;

(b) the Project Manager instructs the Contractor to delay the progress of the Works, and the instruction is not withdrawn within 28 days;

(c) the Employer or the Contractor is made bankrupt or goes into liquidation other than for a reconstruction or amalgamation;

(d) a payment certified by the Project Manager is not paid by the Employer to the Contractor within 84 days of the date of the Project Manager's certificate;

(e) the Project Manager gives Notice that failure to correct a particular Defect is a fundamental breach of Contract and

the Contractor fails to correct it within a reasonable period of time determined by the Project Manager;

(f) the Contractor does not maintain a Security, which is required; and

(g) The Contractor has delayed the completion of the Works by the number of days for which the maximum amount of liquidated damages can be paid, as **defined in the SCC.**

(h) The contractor has contravened Sub-clause 7 of GCC read with SCC and Clause 9.0 of GCC.

(i) The contractor does not adhere to the agreed construction program and agreed environmental management plan (Clause 27 of GCC) and also fails to take satisfactory remedial action as per agreements reached in the management meetings (Clause 31) for a period of 60 days.

(j) The contractor fails to carry out of the instructions of Engineer within a reasonable time determined by the Engineer in accordance with GCC Clause 16.1 and 23.1.

59.3 When either party to the Contract gives notice of a breach of Contract to the Project Manager for a cause other than those listed under GCC Sub-Clause 59.2 above, the Project Manager shall decide whether the breach is fundamental or not.

59.4 Notwithstanding the above, the Employer may terminate the Contract for convenience.

59.5 If the Contract is terminated, the Contractor shall stop work immediately, make the Site safe and secure, and leave the Site as soon as reasonably possible.

60. Corrupt or Fraudulent Practices

60.1 If the Employer determines that the Contractor has engaged in corrupt, fraudulent, collusive, coercive or obstructive practices, in competing for or in executing the Contract, then the Employer may, after giving 14 days notice to the Contractor, terminate the Contractor's employment under the Contract and expel him from the Site, and the provisions of Clause 59.5 shall apply.

60.2 Should any employee of the Contractor be determined to have engaged in corrupt, fraudulent, collusive, coercive, or obstructive practice during the execution of the Works, then that employee shall be removed in accordance with Clause 9.1 [*Personnel*].

60.3 For the purposes of this Sub-Clause:

(i) "corrupt practice"[29] is the offering, giving, receiving or soliciting, directly or indirectly, of anything of value to influence improperly the actions of another party;

(ii) "fraudulent practice"[30] is any act or omission, including a misrepresentation, that knowingly or recklessly misleads, or attempts to mislead, a party to obtain a financial or other benefit or to avoid an obligation;

(iii) "collusive practice"[31] is an arrangement between two or more parties designed to achieve an improper purpose, including to influence improperly the actions of another party;

(iv) "coercive practice"[32] is impairing or harming, or threatening to impair or harm, directly or indirectly, any party or the property of the party to influence improperly the actions of a party;

(v) "obstructive practice" is

(aa) deliberately destroying, falsifying, altering or concealing of evidence material to the investigation or making false statements to investigators in order to materially impede a Bank investigation into allegations of a corrupt, fraudulent, coercive or collusive practice; and/or threatening, harassing or intimidating any party to prevent it from disclosing its knowledge of matters relevant to the investigation or from pursuing the investigation; or

(bb) acts intended to materially impede the exercise of the Bank's inspection and audit rights provided for under Clause 23 [*Instructions, Inspections and Audits*].

61. Payment upon Termination

61.1 If the Contract is terminated because of a fundamental breach of Contract by the Contractor, the Project Manager shall issue a

[29] *"another party" refers to a public official acting in relation to the procurement process or contract execution]. In this context, "public official" includes World Bank staff and employees of other organizations taking or reviewing procurement decisions.*

[30] *a "party" refers to a public official; the terms "benefit" and "obligation" relate to the procurement process or contract execution; and the "act or omission" is intended to influence the procurement process or contract execution.*

[31] *"parties" refers to participants in the procurement process (including public officials) attempting to establish bid prices at artificial, non competitive levels.*

[32] *a "party" refers to a participant in the procurement process or contract execution.*

certificate for the value of the work done and Materials ordered less advance payments received up to the date of the issue of the certificate, less other recoveries due in terms of contract less taxed to be deducted at source [TDS] as per applicable law and less the percentage to apply to the value of the work not completed, as **indicated in the SCC.** Additional Liquidated Damages shall not apply. If the total amount due to the Employer exceeds any payment due to the Contractor, the difference shall be a debt payable to the Employer.

61.2 If the Contract is terminated for the Employer's convenience or because of a fundamental breach of Contract by the Employer, the Project Manager shall issue a certificate for the value of the work done, Materials ordered, the reasonable cost of removal of Equipment, repatriation of the Contractor's personnel employed solely on the Works, and the Contractor's costs of protecting and securing the Works, and less advance payments received up to the date of the certificate less other recoveries due in terms of the contract, and less taxes due to be deducted at source [TDS] as per applicable law.

62 Property

62.1 All Materials on the Site, Plant, Equipment, Temporary Works, and Works shall be deemed to be the property of the Employer if the Contract is terminated because of the Contractor's default.

63. Release from Performance

63.1 If the Contract is frustrated by the outbreak of war or by any other event entirely outside the control of either the Employer or the Contractor, the Project Manager shall certify that the Contract has been frustrated. The Contractor shall make the Site safe and stop work as quickly as possible after receiving this certificate and shall be paid for all work carried out before receiving it and for any work carried out afterwards to which a commitment was made.

64. Suspension of World Bank Loan or Credit

64.1 In the event that the World Bank suspends the Loan or Credit to the Employer, from which part of the payments to the Contractor are being made:

(a) The Employer is obligated to notify the Contractor of such suspension within 7 days of having received the World Bank's suspension notice.

(b) If the Contractor has not received sums due it within the 28 days for payment provided for in Sub-Clause 43.1, the Contractor may immediately issue a 14-day termination notice.

Section VI. Special Conditions of Contract

Except where otherwise indicated, all SCC should be filled in by the Employer prior to issuance of the Bidding Documents. Schedules and reports to be provided by the Employer should be annexed.

A. General	
GCC 1.1 (o)	The Employer is:- Uttarakhand State Infrastructure Development Corporation Ltd., 3/3 Industrial Area, Patel Nagar, Dehradun- 248001. Uttarakhand. India. Tel: 0135-2522941 email- usidcl@gmail.com website- usidcl.gov.in
GCC 1.1 (r)	The Intended Completion Date for the whole of the Works shall be 45 days from the Date of Start.
GCC 1.1 (u)	The Project Manager is:- Er. Vikash Chandra Barthwal, Uttarakhand State Infrastructure Development Corporation Ltd., 3/3 Industrial Area, Patel Nagar, Dehradun- 248001. Uttarakhand. India. Tel: 0135-2522941 email- usidcl@gmail.com website- usidcl.gov.in
GCC 1.1 (w)	The Sites are located in Bageshwar District as under:- **a)** **Bageshwar (Block-Kapkot)** Located at an approximate distance of 130Kms from Kathgodam rail head. Topographical Survey map of the area is enclosed as Drawing No. SURVEY PLAN- 01. **b)** **Kunwari (Block-Kapkot)** Located at an approximate distance of 291Kms from Rishikesh rail head including approximately 25 Kms by mule/ on foot. Topographical Survey map of the area is enclosed as Drawing No. SURVEY PLAN- 02.
GCC 1.1 (z)	The Intended Start Date shall be 14 days from the date of notification of award.

<table>
<tr><td>GCC 1.1 (dd)</td><td>The work consist of Construction of 50 Nos. of Pre-fabricated structure in Bageshwar District of Uttarakhand.</td></tr>
<tr><td>GCC 2.2</td><td>Sectional Completions are:-
a) Intended Completion Date of Plinth- 20 days from the Date of Start.
b) Intended Completion Date of Pre-fabricated houses- 45 days from the Date of Start.</td></tr>
<tr><td>GCC 2.3(i)</td><td>The following documents also form part of the Contract:
<table>
<tr><td>S.No.</td><td>Document</td><td>Description of the document</td></tr>
<tr><td>1.</td><td>Construction Methodology</td><td>Construction methodology given in bid amended as per comments of employer given in letter of acceptance.</td></tr>
</table></td></tr>
<tr><td>GCC 3.1</td><td>The language of the contract is English.
The law that applies to the Contract is the laws of Union of India.</td></tr>
<tr><td>GCC 8.1</td><td>Schedule of other contractors: None.</td></tr>
<tr><td>GCC 9.1</td><td>Key Personnel:
<table>
<tr><td>S. No.</td><td>Designation of Personnel</td><td>No.</td><td>Minimum Qualification</td><td>Minimum years of experience</td><td>Minimum experience in similar/ building works</td></tr>
<tr><td>1.</td><td>Civil Engineer</td><td>1 (Full Time)</td><td>Diploma in Civil Engineering.</td><td>5 years</td><td>3 years</td></tr>
<tr><td>2.</td><td>Supervisor</td><td>2 Nos. (Full Time)</td><td>Trained in Civil Works preferably in construction of prefabricated structures.</td><td>5 years</td><td>3 years</td></tr>
</table></td></tr>
<tr><td>GCC 13.1</td><td>The minimum insurance amounts and deductibles shall be:
<table>
<tr><td>S.No.</td><td>Description</td><td>Minimum cover for Insurance</td><td>Maximum deductible for Insurance</td></tr>
<tr><td>(i)</td><td>Works and Plant and Materials</td><td colspan="2" rowspan="4">In accordance with the statutory requirements applicable in India</td></tr>
<tr><td>(ii)</td><td>Loss or damage to Equipment</td></tr>
<tr><td>(iii)</td><td>Other Property</td></tr>
<tr><td>(iv)</td><td>Personal injury or death insurance:</td></tr>
</table></td></tr>
</table>

	a) for other people; b) for Contractor's Employees
GCC 14.1	Site Investigation Reports, if required, will be made available.
GCC 15.1	Queries. None.
GCC 21.1	The Intended Site Possession Date shall be: 14 days from date of notification of award.
GCC 25.3	Fees and types of reimbursable expenses to be paid to the Adjudicator: Rs. 5000.00 per day.
GCC 25.4	The procedure for arbitration will be as follows: (a) In case of Dispute or difference arising between the Employer and a domestic contractor relating to any matter arising out of or connected with this agreement, such disputes or difference shall be settled in accordance with the Arbitration and Conciliation Act, 1996. The arbitral tribunal shall consist of 3 Arbitrators one each to be appointed by the Employer and the Contractor. The third Arbitrator shall be chosen by the two Arbitrators so appointed by the Parties and shall act as Presiding Arbitrator. In case of failure of the two Arbitrators appointed by the parties to reach upon a consensus within a period of 30 days from the appointment of the Arbitrator appointed subsequently, the Presiding Arbitrator shall be appointed by the * Indian Council of Arbitration/ President of the Institution of Engineers (India)/The International Centre for Alternative Disputes Resolution (India). (b) In the case of dispute with a Foreign contractor the dispute shall be settled in accordance with provisions of UNCITRAL Arbitration Rules. The Arbitral Tribunal shall consist of three Arbitrators one each to be appointed by the Employer and the Contractor. The third Arbitrator shall be chosen by the two Arbitrators so appointed by the Parties, and shall act a presiding Arbitrator. In case of failure of the two Arbitrators appointed by the parties to reach upon a consensus within a period of 30 days from the appointment of the Arbitrator appointed, the Presiding Arbitrator shall be appointed by the *Indian Council of Arbitration/President of the Institution of Engineers (India)/The International Centre for Alternative Disputes Resolution (India). (c) If one of the parties fails to appoint its Arbitrator in pursuance of sub-clause (a) and (b) above within 30 days after receipt of

	the notice of the appointment of its Arbitrator by the other party, then the *Indian Council of Arbitration/President of the Institution of Engineers (India)/The International Centre for Alternative Disputes Resolution (India), both in cases of Foreign Contractor as well as Indian Contractor, shall appoint the Arbitrator. A certified copy of the order of the * Indian Council of Arbitration/President of the Institution of Engineers (India)/The International Centre for Alternative Disputes Resolution (India), making such an appointment shall be furnished to each of the parties. (d) Arbitration proceedings shall be held at Dehradun, Uttarakhand, India, and the language of the arbitration proceedings and that of all documents and communications between the parties shall be English. (e) The decision of the majority of Arbitrators shall be final and binding upon both parties. The cost and expenses of Arbitration proceedings will be paid as determined by the arbitral tribunal. However, the expenses incurred by each party in connection with the preparation, presentation, etc. of its proceedings as also the fees and expenses paid to the Arbitrator appointed by such party or on its behalf shall be borne by each party itself. (f) Where the value of the contract is Rs.50 millions and below, the disputes or differences arising shall be referred to the Sole Arbitrator. The Sole Arbitrator should be appointed by agreement between the parties; failing such agreement, by the appointing authority, namely the * Indian Council of Arbitration/President of the Institution of Engineers (India)/The International Centre for Alternative Disputes Resolution (India). (g) Performance under the contract shall continue during the arbitration proceedings and payments due to the contractor by the owners shall not be withheld, unless they are the subject matter of the arbitration proceedings.
GCC 26.1	Appointing Authority for the Adjudicator: Chairman, State Centre, Institution of Engineers (India), Dehradun, Uttarakhand.
B. Time Control	
GCC 27.1	The Contractor shall submit a revised Program including Environmental Management Plan for the Works (in such form and detail as the engineer shall reasonably prescribe) within 3 days of delivery of the Letter of Acceptance.

	[*This program should be in adequate detail and generally conform to the program submitted alongwith bid in response to ITB Clause5.3(k). Deviations if any from that should be clearly explained and should be satisfactory to the Engineer]*
GCC 27.3	The period between Program updates is 15 days. The amount to be withheld for late submission of an updated Program is Rs. 2,000.00 per day.
C. Quality Control	
GCC 35.1	The Defects Liability Period is: 365 days.
D. Cost Control	
GCC 47.1	Price Adjustment : The contract is not subject to price adjustment
GCC 48.1	The proportion of payments retained (Retention Money) shall be 6% from each bill subject to the maximum of 5% of final contract price.
GCC 49.1	The liquidated damage for the whole of the Work is 0.2% of contract price per day. The maximum amount of liquidated damages for the whole of the Works is 10% of the final contract price.
GCC 51.1	The amount of the advance payment are: Nature of Advance / Amount (Rs.) / Conditions to be fulfilled 1. Mobilization / 10% of the Contract price / On submission of un-conditional Bank Guarantee. *(to be drawn before end of 20% of Contract period*) 2. Equipment / None. (*This advance is not applicable for equipment already owned or hired/leased by the contractor*.) 3. Secured advance for / 75% of Invoice value / a) The materials are

	non-perishable materials brought to site [*Specify the item or items for which this will be given here*]	or Market value – lower of the two.	in-accordance with the specification for Works; b) Such materials have been delivered to site, and are properly stored and protected against damage or deterioration to the satisfaction of the Project Manger. c) the Contractor's records of the requirements, orders, receipt and use of materials are kept in a form approved by the Project Manager and such records shall be available for inspection by the Project Manager; d) The contractor has submitted with his monthly statement the estimated value of the materials on site together with such documents as may be required by the Project Manager for the purpose of valuation for material and providing evidence of ownership and payment thereof; e) Ownership of such materials shall be

	deemed to vest in the Employer for which the Contractor has submitted an Indemnity Bond in an acceptable format; and f) The quantity of materials are not excessive and shall be used within a reasonable time as determined by the Project Manager. (The advance payment will be paid to the Contractor no later than 15 days after fulfillment of the above conditions). Repayment of advance payment for mobilization and equipment: The advance shall be repaid with percentage deductions from the interim payments certified by the Engineer under the Contract. Deductions shall be made at the rate of 10% of the amounts of all Interim Payment Certificates until such time as the advance has been repaid, always provided that the advance shall be completely repaid prior to the expiry of the original time for completion. Repayment of secured advance: The advance shall be repaid from each succeeding monthly payments to the extent materials [*for which advance was previously paid pursuant to Clause 51.4 of G.C.C. and 51(3) of S.C.C.*] have been incorporated into the Works.
GCC 52.1	a) The Performance Security for 5 percent of contract price and additional security for unbalanced bids [*in terms of ITB Clause 30.6*] b) The standard form of Performance Security acceptable to the Employer shall be an <u>unconditional</u> Bank Guarantee of the type as presented in Section X of the Bidding Documents. c) The Performance Security shall be submitted within 7 days of date of notification of award.
E. Finishing the Contract	
GCC 58.1	a) The date by which operating and maintenance manuals are required is within 28 days of issue of certificate of completion of whole or

	section of work, as the case may be None. b) The date by which "as-built" drawings (in scale as directed by Engineer-in-charge) in 2 sets are required is within 10 days of issue of certificate of completion of whole work.
GCC 58.2	The amount to be withheld for failing to produce "as built" drawings and/or operating and maintenance manuals by the date required in G.C.C. 58.1 is Rs. 50,000.00
GCC 59.2 (g)	The maximum number of days is: 50 days.
GCC 61.1	The percentage to apply to the value of the work not completed, representing the Employer's additional cost for completing the works, is 20%.

Appendices

Appendix 1

Salient Features of Labour Laws

SALIENT FEATURES OF SOME MAJOR LABOUR LAWS APPLICABLE TO ESTABLISHMENTS ENGAGED IN BUILDING AND OTHER CONSTRUCTION WORK

(The law as current on the date of bid opening will apply)

Labour Laws	(a)	Workman Compensation Act 1923 : The Act provides for compensation in case of injury by accident arising out of and during the course of employment.
	(b)	Payment of Gratuity Act 1972: gratuity is payable to an employee under the Act on satisfaction of certain conditions on separation if an employee has completed 5 years service or more or on death the rate of 15 days wages for every completed year of service. The Act is applicable to all establishments employing 10 or more employees.
	(c)	Employees P.F. and Miscellaneous Provision Act 1952 (*since amended*): The act Provides for monthly contribution by the employer plus workers @ 10% or 8.33%. The benefits payable under the Act are: (i) Pension or family pension on retirement or death, as the case may be. (ii) Deposit linked insurance on the death in harness of the worker. (iii)Payment of P.F. accumulation on retirement/death etc.
	(d)	Maternity Benefit Act 1951: The Act provides for leave and some other benefits to women employees in case of confinement or miscarriage etc.
	(e)	Contract Labour (Regulation & Abolition) Act 1970: The Act provides for certain welfare measures to be provided by the Contractor to contract labour and in case the Contractor fails to provide, the same are required to be provided, by the Principal Employer by Law. The Principal Employer is required to take Certificate of Registration and the Contractor is required to take license from the designated Officer. The Act is applicable to the establishments or Contractor of Principal Employer if they employ 20 or more contract labour.
	(f)	Minimum Wage Act 1948: The Employer is supposed to

	pay not less than the Minimum Wages fixed by appropriate Government as per provisions of the Act if the employment is a schedule employment. Construction of Buildings, Roads, Runways are schedule employments. (g) Payment of Wages Act 1936: It lays down as to by what date the wages are to be paid, when it will be paid and what deductions can be made from the wages of the workers. (h) Equal Remuneration Act 1979: The Act provides for payment of equal wages for work of equal nature to Male and Female workers and for not making discrimination against Female employees in the matters of transfers, training and promotions etc. (i) Payment of Bonus Act 1965: The Act is applicable to all establishments employing 20 or more employees. The Act provides for payments of annual bonus subject to a minimum of 8.33% of wages and maximum of 20% of wages to employees drawing Rs.3500/- per month or less. The bonus to be paid to employees getting Rs.2500/- per month or above upto Rs.3500/- per month shall be worked out by taking wages as Rs.2500/- per month only. The Act does not apply to certain establishments. The newly set-up establishments are exempted for five years in certain circumstances. Some of the State Governments have reduced the employment size from 20 to 10 for the purpose of applicability of this Act. (j) Industrial Disputes act 1947: the Act lays down the machinery and procedure for resolution of Industrial disputes, in what situations, a strike or lock-out becomes illegal and what are the requirements for laying off or retrenching the employees or closing down the establishment. (k) Industrial Employment (Standing Order) Act 1946: It is applicable to all establishments employing 100 or more workmen (employment size reduced by some of the States and Central Government to 50). The Act provides for laying down rules governing the conditions of employment by the Employer on matters provided in the Act and get the same certified by the designated Authority. (l) Trade Unions Act 1926: The Act lays down the procedure for registration of trade unions of workmen and employers.

	The Trade Unions registered under the Act have been given certain immunities from civil and criminal liabilities. (m) Child Labour (Prohibition & Regulation) Act 1986: The Act prohibits employment of children below 14 years of age in certain occupations and processes and provides for regulation of employment of children in all other occupations and processes. Employment of Child Labour is prohibited in Building and Construction Industry. (n) Inter-State Migrant workmen's (Regulation of Employment & Conditions of Service) Act 1979: The Act is applicable to an establishment which employs 5 or more inter-state migrant workmen through an intermediary (who has recruited workmen in one state for employment in the establishment situated in another state). The Inter-State migrant workmen, in an establishment to which this Act becomes applicable, are required to be provided certain facilities such as housing, medical aid, traveling expenses from home upto the establishment and bank etc. (o) The Building and Other Construction works (Regulation of Employment and Conditions of Service) Act 1996 and the Cess Act of 1996: All the establishments who carry on any building or other construction work and employs 10 or more workers and covered under this Act. All such establishments are required to pay cess at the rate not exceeding 2% of the cost of construction as may be modified by the Government. The Employer of the establishment is required to provide safety measures at the Building or construction work and other welfare measures, such as Canteens, First –Aid facilities, Ambulance, Housing accommodations for workers near the work place etc. The Employer to whom the Act applies has to obtain a registration certificate from the Registering Officer appointed by the Government. (p) Factories Act 1948: the Act lays down the procedure for approval at plans before setting up a factory, health and safety provisions, welfare provisions, working hours, annual earned leave and rendering information regarding accidents or dangerous occurrences to designated authorities. It is applicable to premises employing 10 persons or more with aid of power or 20 or more persons without the aid of power engaged in manufacturing process

SALIENT FEATURES OF SOME OF THE MAJOR LAWS THAT ARE APPLICABLE FOR PROTECTION OF ENVIRONMENT.

Laws on protection of Environment	1. The Water(Prevention and Control of Pollution) Act, 1974, This provides for the prevention and control of water pollution and the maintaining and restoring of wholesomeness of water. 'Pollution' means such contamination of water or such alteration of the physical, chemical or biological properties of water or such discharge of any sewage or trade effluent or of any other liquid, gaseous or solid substance into water(whether directly or indirectly) as may, or is likely to, create a nuisance or render such water harmful or injurious to public health or safety, or to domestic, commercial, industrial, agricultural or other legitimate uses, or to the life and health of animals or plants or of aquatic organisms. 2. The Air (Prevention and Control of Pollution) Act, 1981, This provides for prevention, control and abatement of air pollution. 'Air Pollution' means the presence in the atmosphere of any 'air pollutant', which means any solid, liquid or gaseous substance (including noise) present in the atmosphere in such concentration as may be or tend to be injurious to human beings or other living creatures or plants or property or environment. 3. The Environment(Protection) Act, 1986, This provides for the protection and improvement of environment and for mattes connected therewith, and the prevention of hazards to human beings, other living creatures, plants and property. 'Environment' includes water, air and land and the inter-relationship which exists among and between water, air and land, and human beings, other living creatures, plants, micro-organism and property. 4. The Public Liability Insurance Act, 1991, This provides for public liability insurance for the purpose of providing immediate relief to the persons affected by accident occurring while handling hazardous substances and for mattes connected herewith or incidental thereto. Hazardous substance means any substance or preparation which is defined as hazardous substance under the Environment (Protection) Act 1986, and exceeding such quantity as may be specified by notification by the Central Government.

Appendix 2

BOQ SCHEDULES

[The following Schedules are for example only. The schedules may be modified and specified as appropriate for each work]

Schedule 1: Earth Work In Formation
Schedule 2: Civil Engineering Work (Bridge)
Schedule 3: Civil Engineering Work Building,
Schedule 4: Steel Fabrication Works
Schedule 5: Road Works –WBM
Schedule 6: Road BTM
Schedule 7:

IPC – Interim Payment Certificate

Appendix -3

Appointment of Adjudicator

Suggested Draft of Letter of Appointment of Adjudicators in civil works contracts

Sub:_____(Name of the Contract)

To

Name and address of the Adjudicator

We hereby confirm your appointment as adjudicator for the above contract to carry out the assignment specified in this Letter of Appointment.

For administrative purpose_____(*name of the officer representing the employer*) has been assigned to administer the assignment and to provide the Adjudicator with all relevant information needed to carry out the assignment on behalf of both the employer and the contractor. The services will be required during the period of contract for the work of (Name of the Contract)_____.

The Adjudicator shall visit the worksite once in 3 (three)months till the completion of the work indicated above or as specifically requested by employer/contractor for the period upto the end of defects liability period with prior intimation to the employer and the contractor. The duration of each visit shall ordinarily be for one day only. These durations are approximate and (*Name of the employer and Name of the Contractor*) may find it necessary to postpone or cancel the assignment and/or shorten or extend the duration.

The appointment will become effective upon confirmation of letter by you. The appointment of Adjudicator shall be liable for termination under a 30 (thirty) days written notice from the date of issue of the notice, if both Employer and the Contractor so desire. Also the appointment shall automatically stand terminated 14 days after the defect notice / correction period as stated in Clauses 35 and 36 of the Conditions of Contract is over.

The Adjudicator will be paid a fee of Rs._____(Rupees _____only) per each day of visit at the worksite. The actual expenses for boarding and traveling in connection with the assignment will be reimbursed to the Adjudicator. The Adjudicator will submit a pre-receipted bill in triplicate to the employer indicating the date of the visit, fees for the visit and a proof in support of the actual expenditure incurred by him against boarding, lodging and traveling expenses after performing the visit on each occasion. The Employer will make the admissible payment(both the Employer's and the Contractor's share) to the Adjudicator within 30 days of the receipt of the bill. The Contractor's share on this account(half the paid amount) will be recovered by the Employer from the Contractor's bills against the work.

In accepting this assignment, the Adjudicator should understand and agree that he is responsible for any liabilities and costs arising out of risks associated with travel to an from

the place of emergency repatriation, loss or damage to personal/professional effects and property. The Adjudicator is advised to effect personal insurance cover in respect of such risks if he does not already have such cover in place. In this regard, the Adjudicator shall maintain appropriate medical, travel, accident and third-party liability insurance. The obligation under this paragraph will survive till termination of this appointment.

Procedures for resolution of disputes by the Adjudicator is described in the contract of _____(name of the contract) between the employer and the contractor vide clauses no.24,25 and 26 of the Conditions of Contract. Your recommendation should be given in the format attached, within 28 days of receipt of a notification of dispute.

The Adjudicator will carry out the assignment in accordance with the highest standard of professional and ethical competence and integrity, having due regard to the nature and purpose of the assignment, and will conduct himself in a manner consistent herewith. After visiting the worksite, the Adjudicator will discuss the matter with the Employer and if necessary with the Contractor before arriving at any decision.

The Adjudicator will agree that all knowledge and information not within the public domain, which may be acquired while carrying out this service shall be all time and for all purpose, regarded as strictly confidential and held in confidence, and shall not be directly or indirectly disclosed to any party whatsoever, except with the permission of the employer and the contractor. The Adjudicator's decision should be communicated in the form of a speaking order specifying the reasons.

The Adjudicator will agree that any manufacturing or construction firm with which he might be associated with, will not be eligible to participate in bidding for any goods or works resulting from or associated with the project of which this consulting assignment forms a part

Read and Agreed

Name of Adjudicator
Signature

Place:

Date:

Name of Employer
Signature of authorized representative of Employer

Name of the Contractor
Signature of authorized representative of Contractor

Attachment: Copy of contract document between the employer and contractor and format for recommendation.

SUMMARY OF AJUDICATIOR'S RESPONSIBILITIES

The Adjudicator has the following principal responsibilities:

1. Visit the site periodically.

2. Keep abreast of job activities and developments.

3. Encourage the resolution of disputes by the parties.

4. When a dispute is referred to it, conduct a hearing (no legal presentation), complete its deliberations, and prepare a recommendations in a professional and timely manner(as per sample format)

Sample Format of Adjudicator's Recommendation

[Project Name]
Recommendation of Adjudicator

Dispute No. XX [*NAME OF DISPUTE*]

Hearing Date:_____

Dispute

Description of dispute. A one or two sentence summation of the dispute.

Contractor's Position

A short summation of the contractor's position as understood by the Adjudicator.

Employer's Position

A short summation of the Employer's position as understood by the Adjudicator.

Recommendation

The Adjudicator's specific recommendation for settlement of the dispute. (*The recommended course is consistent with the explanation*).

Explanation

(*This section could also be called Considerations, Rationale, Findings, Discussion, and so on.*)

The Adjudicator's description of how each recommendation was reached.

Respectfully submitted,

Date : _____ _____

Date : _____ _____

Date : _____ _____

Section VII. Specifications & Performance Requirements

The purpose of the Technical Specifications (TS), is to define the technical characteristics of the Goods and Related Services required by the USIDCL. Prefabricated Houses made out of steel structure and PUF panels as per enclosed drawings and the detailed technical specification are tabulated below:-

1. **Scope of Work:-** The work consists of manufacture, supply and installation of pre-fabricated houses of size 7.05 m x 5.10 m x 2.6 m (at eaves end) including verandah by making necessary foundation and plinth at site, as per drawing attached. The manufacturer shall supply detailed list of components that go into making of the houses complete. The earth work for excavation in foundation, filling in plinth, plain cement concrete in foundation, stone/brick masonry in foundation and plinth, cement concrete flooring with base concrete, internal electrification works, internal water supply works, doors, windows and ventilators are also within the scope of the work.

2. **Design Criteria.**

a)	Seismic Co-efficient	- As per Seismic Zone "V'.
b)	Snow load	- 0.5 meter standing on roof.
c)	Wind load	- Equivalent to wind speed of 55m/Sec as per IS-875
d)	Roof slope	- 1:2 to 1:5
e)	External temperature	- (-) 25 degree C to (+) 45 degree C
f)	Water absorption/ Penetration	- Nil
g)	Termite proofing	- Termite proof
h)	Fire resistant	- Fire retardant and should not emit toxic fumes.
i)	Ease of construction	- Shelter should be modular in design.
j)	Design	- As per IS-875

3. **Design data.**
   a) Length - 7.05 mtr
   b) Width - 5.10 mtr
   c) 2.6 m clear height from finished floor level to bottom surface (i.e. eaves end) of the roof insulation panels.
   d) The design period of structure shall be minimum 25 years. The design of the structure shall be got vetted/ proof checked by the contractor from any reputed engineering institution as directed by USIDCL. The cost of vetting/ proof checking shall be borne by the Contractor.

4. **Foundation & Plinth work.** Foundation & Plinth work to be done with civil construction material which is locally/easily available. Only peripheral foundation of the building shall be made by excavating earth work upto 450mm deep as per drawings below ground level and making plinth of 300mm above ground level. The peripheral foundation work has been taken

to retain the filled-up soil for making plinth and to avoid the entry of insect/animal into the building. The load of super structure shall be transferred at ground by column/post by anchor bolt at ground as per drawing and design. The foundation for column/post shall be designed to withstand the load of sub structure & super structure taking consideration of wind load (min 55mtr/Sec), earth quake load (Zone- V) and snow fall etc. by the contractor/ Employer. The peripheral plinth masonry shall have following components:-

a) 1st class brick masonry in 1:6 (1 cement: 6 coarse sand) cement mortar/ Random rubble masonry in 1:6.
b) 100mm thick foundation base concrete mix shall be 1:4:8 (1 cement: 4 coarse sand: 40mm gauge stone ballast) as per drawings.
c) Exposed portion of plinth shall be provided with 12mm thick plaster in 1:6 (1cement: 6 fine sand) mortar on brick work or pointing on stone work.
d) 100mm thick base concrete (PCC) under the flooring of plinth area shall be 1:4:8 (1 cement: 4 coarse sand: 40mm gauge stone ballast) as per drawings.
e) Necessary river bed material filling in plinth, as directed by Engineer-in-charge.

All civil work shall be carried out with standard engineering practice and as per Uttarakhand PWD specifications & relevant drawings.

5. **Flooring.**

40mm thick cement concrete flooring 1:2:4 (1 cement: 2 coarse sand : 4 graded stone 20mm nominal size stone aggregate) finished with a floating coat of neat cement including cement slurry etc. including providing and fixing, 35 mm wide and 4 mm thick glass strips in joints of cement concrete floors etc complete.

6. **Structural Member of Pre-fabricated Structures:-** All columns, trusses, purlins etc. will be made of suitable size hallow steel tube/pipe/ rolled steel section. The columns will have foundation MS plate not less than 10 mm thick with MS foundation bolt of size minimum 20mm dia and 450mm length. All lugs, cleats, side runners/channels will be of sound material of high strength. The strength of the weld will be equal to the maximum of tensile/compressive strength of the structural member.

   All structural members/ steel members shall be factory painted with Red oxide Zinc chromate primer to an average of 25 micron thickness (for protection during transportation to job site). The structural member shall have minimum yield strength of 24.00 KN/cm2. The roof will be laid over a framework of columns trusses; and purlins jointed together using suitable fasteners like self drilling bolts or J-hooks with bitumen washers, nuts, bolts etc. The maximum spacing /pitch of the purlins shall be 1.8m.

7. **Base plate and Foundation Bolts.**

   a) **Base Plate.** Minimum size 220 mm x 220 mm x 10 mm with holes for foundation bolts as per drawing.
   b) **Foundation Bolts**. Size dia 20 mm x 450 mm long, four numbers for each foundation. The bolts must be made from new/ unused MS bars and minimum length of threads should be 100 mm.
   c) The foundation bolts at required locations will be fixed on the plinths for erection of the prefabricated structures. Foundation bolts shall be of MS rods conforming to IS

2062 or equivalent with minimum yield strength of 24.00 KN/cm2 and should be as per design to with stand of load of substructure, superstructure (wind load min 55mtr/Sec) snow load etc. as per requirement. Cement concrete of 1:1$^1/_2$:3 mix (1 cement: 1$^1/_2$ coarse sand: 3 coarse aggregate 20mm nominal size) shall be provided to fix the foundation bolt in foundation.

8. **Wall Panel (Internal/External).** All walls shall be made of PPGI metal skin PUF panel. The total minimum thickness of PUF panel shall be 75mm. The PUF insulation material in the panel shall have fire retarding and self extinguishing of properties as per any international standard.
   a) All material required for the manufacture of shelter shall be new and comply with relevant Bureau of Indian Standard Specification.
   b) These panels are to be manufactured using latest technology to inject specified amount of PUF chemical into the cavity of a full panel. This is to ensure that the liquid PUF mixture is sprayed into the cavity before the foaming reaction starts so that the insulation core of the panel is formed in one piece and provides desired structural and physical properties. The tolerance in the panel can only be on the plus side.
   c) The PUF panel shall be CFC free and Zero Ozone depleting panel. Panel shall have pre-painted GI sheet on both side of Polyurethane Foam (PUF) conforming to IS 12436:1988. The PUF insulated core of these composite panel should have the following properties:-

(i)	Density	- 40 Kg/cum $\pm$ 2 Kg
(ii)	Thermal conductivity of insulation 'K'	- $\leq$ 0.025 Watt/ m K
(iii)	Compressive strength	- 110-210kpa
(iv)	Tensile Strength	- 370 kpa
(v)	Adhesion Strength	-110-210kpa
(vi)	Water Absorption	- 0.20% volume at 98%RH

   d) The outer GI skin of the panel should be 0.50mm thick with minimum 25- micron thick PVC guard film on the finished surface only for protection against scratches during handling and transportation. The pre coated sheet shall be of minimum 240 mpa steel grade conforming to IS 14246:1995 or subsequently equivalent and shall have zinc coating of minimum 120 gsm as per IS : 277 : 1992 or subsequently equivalent, 5-7 microns epoxy primer on both side of the sheet and polyester top coat 15-18 micron.
   e) 1 mm thick MS sheet channel at the bottom (Floor level) and top shall be provided to slide and fit the wall panels.
   f) All panels should have a tongue and groove profile on all joining edges with minimum projection 10mm high and 30mm wide for airtight sealing of joints with similar colour silicon or equivalent material.
   g) The employer can carry out inspection of any one panel from the lot at manufacturer premises to ensure above chemical and physical properties.

h) The colour of wall panels shall be appliance off-white both side or as per direction of engineer in charge.

9. **Roof.**

The roof panel shall be made of minimum 40/74 mm PUF insulated thick Corrugated Panel with minimum 0.50mm PPGI (Pre Painted Galvanized Iron) sheet on both sides in 40±2 Kg/cum Density. The PUF panel shall be CFC free and Zero Ozone depleting panel. Panel shall have pre coated GI sheet on both side of Polyurethane Foam (PUF) conforming to IS 12436:1988. The pre coated sheet shall be of minimum 240 mpa steel grade conforming to IS 14246:1995 and shall have zinc coating of minimum 120 gsm as per IS : 277 : 1992, minimum coating of 4-5 microns epoxy primer on both side of the sheet and polyester top coat 15-18 micron. The PPGI sheet shall have plastic protective guard film of minimum 25 microns to avoid scratches during transportation. The panels shall be vertically joined together by tongue and groove joints finished with adhesive to make it a proper joint. The PUF insulation material in the panel shall be self-extinguishing and fire retarding type, as per any International standard. The roof shall be provided with 50mmx5mm size MS Flats wind ties and ridge shall be suitably covered with PPGI sheet of sufficient width and thickness using suitable fasteners. The roof shall have minimum projection of 300mm from the Eaves wall and 150mm from the Gable wall.

The PUF insulated core of these composite panels will have the following additional properties:-

(i) Density	- 40 Kg/cum ± 2 Kg
(ii) Thermal conductivity of insulation 'K'	- ≤ 0.025 Watt/ m K
(iii) Compressive strength	- 110-210kpa
(iv) Tensile Strength	- 370 kpa
(v) Adhesion Strength	-110-210kpa
(vi) Water Absorption	- 0.20% volume at 98%RH

The colour of roof panels shall be Terracotta / Blue at outer side and Appliance white at inner side or as per direction of engineer-in-charge. A GI ridge cover of size 225mm x 225mm made from PPGI sheet shall be fitted on the top junction of the roof with suitable fastners.

10. **Flashings.** All joints/corners etc shall be formed out of 0.50mm thick PPGI flashings as per requirement and direction of Engineer-in-charge.

11. **Sun Shade.** Doors, windows and ventilators opening except where covered verandah is available will be provided with sun shade. Suitable sun shade made out of same material as of roof sheets matching with roof colour. Suitable brackets should be provided for fixing sun shade to the wall alongwith proper fixing arrangement inside the wall panels. Sun shade will have 20 deg downward slope.

12. **Doors.**

Suitable size openable type door shall be provided in each unit as per drawing.

(i) **Door Frame.** Door frame shall be made of minimum 1.25 mm thick pressed steel section. The section shall be welded at corner. The door frame shall be fixed in wall panels with suitable fasteners.

(ii) **Door Shutters.** Single leaf shutters shall be made out with GI pre-painted sheet both side of PUF. The total thickness of shutter shall not be less than 35mm including PUF material of same specifications as mentioned in Wall and Roof Panel. The door shutter shall be fixed to the door frame with sufficient number of hinges.

(iii) Each door shall be provided with following fittings of ISI mark and as per direction of Engineer-In-Charge:-

a) 4 Nos. Iron/SS hinges 100mm long.
b) 1 No. MS sliding bolt of 250x16mm size (Aldrops at out side)
c) 2 Nos. MS tower bolt of 200x10mm
d) 2 Nos. MS handles 150mm size
e) 1 No. MS door stopper double

(iv) **Size of door (as per drawings)**

D = 1000 x 2100 mm- 2 Nos.
D1 = 750 x 2100 mm- 3 Nos.

13. **Window and Ventilators.**

(i) **Frame.** Frame shall be made of minimum 1.25 mm thick pressed steel. The section shall be welded at corner. The frame shall be fixed in wall panels with suitable fasteners.

(ii) **Shutters.**

- Window/ ventilator shutter made of z-section or subsequently equivalent material shall be provided with 10mm thick polycarbonate multilayer sheet or substantially equivalent material with steel lipping all-round, duly fixed to the duly painted frame using 3 hinges of 3 inches on each side.
- Each of window/ventilator shutters shall include sufficient and suitable handles, tower bolts and wind stays.
- Size of Window & Ventilator are:

  W = 1500 x 1200 mm - 2 Nos.
  W1 = 600 x 1050 mm - 3 Nos.
  V = 600 x 450 mm - 3 Nos.

(iii) **Grill.** 10mm Steel Bars (Grill) at 100mm spacing, shall provided in the frame for safety.

14. **Kitchen Counter.** Kitchen counter shall be made with 50mm thick RCC (1:2:4) nominal mix slab with necessary reinforcement & furnished with neat cement complete in all respect on brick pedestal in 1:6 cement mortar, as per direction of engineer-in-charge and as per Uttarakhand PWD Specification.
15. **Finishes.** All steel members shall be painted with 2 coats of synthetic enamel paint over one coat of red oxide primer.
16. **Curtain Rods and Pegs.** Provision of brackets for curtain rods should be made to hold the curtain rods at each opening. Sufficient number of pegs should be provisioned to hang light weight articles.
17. **Shop Floor Drawings.** Fabrications, fixing and details of cleats, plates and member shall be given by tenderer. Any details not specifically indicating in the drawing shall be designed

and incorporated by Employer in his drawings. Shop floor drawings for all such components, if any, shall be submitted for approval before commencing the work.

18. **Workmanship**
    a) **Connections.** Welded/ Riveted connections shall be provided unless otherwise specified in the drawings as per design and relevant IS codes. All sections joining at a point shall have their gravity axes meeting at a point so as to avoid eccentricity.
    b) **Fabrications.** The general provisions given in the relevant sections of IS code for all types of steel and aluminum material shall apply for all respective fabrications.
    c) All surfaces shall be thoroughly cleaned of dust, dirt, scales, oil etc. before painting.
    d) All workmanship shall cater for rugged and robust shelter including its all components as it would require transportation on mountainous metalled/unmetalled road.
19. **Drawings.** Outline drawings and typical technical drawings of shelter are enclosed for proper execution.

20. **Plumbing & Sanitary Works.** The following sanitary fitting of ISI mark shall be provided in each house which will conform to respective IS codes:-
    (i) All sanitary works within prefabricated houses & upto Ist manhole shall be in the contractor's scope of work.
    (ii) All plumbing & water supply work within prefabricated houses shall be in contractor's scope of work.

Kitchen & Toilets shall be provided with following plumbing & sanitary fittings as per drawings:-

S. No.	Description of Item	Qty	Unit
1	Providing and fixing water closet squatting pan (Indian type W.C. pan) with 100 mm sand cast Iron P or S trap, 10 litre low level white P.V.C. flushing cistern, including flush pipe, with manually controlled device (handle lever) conforming to IS : 7231, with all fittings and fixtures complete, including cutting and making good the walls and floors wherever required : White Vitreous china Orissa pattern W.C. pan of size 580x440 mm with integral type foot rests (Make - Cera/Hindware/Perryware/ substantially equivalent make).	1	Nos
2	Providing and fixing wash basin with C.I. brackets, 15 mm C.P. brass pillar taps, 32 mm C.P. brass waste of standard pattern, including painting of fittings and brackets, cutting and making good the walls wherever require : White Vitreous China Flat back wash basin size 550x400 mm with single 15 mm C.P. brass pillar tap. (Make - Cera/Hindware/Perryware/ substantially equivalent make)	1	Nos
3	Providing and fixing C.P. brass stop cock / angle cock of standard design and of approved make conforming to IS:8931. 15mm nominal bore. (Make - Ceramix/Parko/ESS/ substantially equivalent make)	2	Nos.

4	Providing and fixing C.P. brass long body bib cock of approved quality conforming to IS standards and weighing not less than 690 gms. 15mm nominal bore. (Make - Ceramix/Parko/ESS/ substantially equivalent make)	2	Nos
5	Providing and fixing C.P. brass short body bib cock of approved quality conforming to IS:8931 15mm nominal bore. (Make - Ceramix/Parko/ESS/ substantially equivalent make)	1	Nos
6	Providing and fixing PTMT grating /CP jali of approved quality and colour. Circular type. 100 mm nominal dia.	3	Nos
7	Providing and fixing G.I. pipes complete with G.I. fittings and clamps, including cutting and making good the walls etc. Internal work - Exposed on wall		
(i)	15 mm nominal outer dia. Pipes	Upto 12	Mtr.
8	Providing and fixing uplasticised PVC connection pipe with brass unions 30 cm length 15 mm nominal bore	3	Nos
9	Providing and fixing 600x450 mm bevelled edge mirror of superior glass (of Nos. approved quality) complete with 6 mm thick hard board ground fixed to wooden cleats with C.P. brass screws and washers complete.	1	Nos
10	Providing and fixing square-mouth S.W. gully trap class SP-1 complete with C.I. grating brick masonry chamber with water tight C.I. cover with frame of 300 x300 mm size (inside) the weight of cover to be not less than 4.50 kg and frame to be not less than 2.70 kg as per standard design : 100 x100 mm size P type With F.P.S. Bricks class designation 75	2	Nos
11	Constructing brick masonry chamber for underground C.I. inspection chamber Inside dimensions 455x610 mm and 45 cm deep for single pipe line : With F.P.S. bricks	1	Nos
12	Providing and fixing of 100 mm dia PVC supreme pipe including supply of all material labour and T&P etc. required for proper completion of work.	Upto 5	Rmt
13	Providing and fixing of 75 mm dia PVC supreme pipe including supply of all material labour and T&P etc. required for proper completion of work.	Upto 5	Rmt
14	Providing and fixing 100/75mm dia PVC nahani/floor trap.	3	Nos.

Note:- All above items shall be executed as per Uttarakhand PWD Specifications.

21. **Internal Electrical work.** Electrification work for lighting etc. shall be provided in the shelter. The wiring shall be carried out with HDPVC conduit / PVC casing capping system which is run on wall and roof / ceiling. The electrical works within prefab houses shall be in contractor's scope of work. Main line connection will not be in scope of work of contractor. All electrical works shall be provided with following electrical fittings as per drawings:-

S. No.	Description of Item	Qty	Unit
1	Wiring for light point/fan point/exhaust fan point/call bell point with 1.5 sqmm. FR PVC insulated copper conductor single core cable in surface/recessed PVC conduit, with piano type switch, phenolic, laminated sheet, suitable size MS Box and earthing the point with 1.5 sq.mm FR PVC insulated copper conductor single core cable etc as required. (Make - Polycab/RRKable/Havells/Finolex/ substantially equivalent make) Group B	12	Point
2	Wiring for curcuit/ submain wiring alongwith earth wire the following sizes of FR PVC insulated copper conductor, single core cable in surface/ recessed steel conduit as required (Make - Polycab/RRKable/Havells/Finolex/substantially equivalent make)		
	2x1.5 sq. mm + 1 x 1.5 sq.mm earth wire	Upto 60	Metre
	2 x 2.5 sq. mm + 1 x 2.5 sq. mm earth wire	Upto 30	Metre
	2 x 4 sq. mm + 1 x 4 sq. mm earth wire	Upto 8	Metre
3	Supplying and fixing of following sizes of PVC conduit along with accessories in surface/recess including cuttting the wall and making good the same in case of recessed conduit as required. (Make -Polycab/AKG/Gaurav/substantially equivalent make) 20 mm	Upto 10	Metre
4	Supplying and fixing following piano type switch/ socket on the existing switch box/ cover including connections etc. as required. (Make - Anchor/Cona/Havells/substantially equivalent make)		
	5/6 amp Switch	12	Nos
	3 Pin, 5/6 amp Socket	3	Nos
5	Supplying and fixing metal box of 150mm x 75mm x 60mm deep (nominal size) on surface or in recess with suitable size of phenolic laminated sheet cover in front including providing and fixing 3 pin 5/6 anos socket outlet and 5/6 amps piano type switch, connection, painting etc. as required. (For light plugs to be used in non residential buildings). (Make - Anchor/Havells/GWI/ substantially equivalent make)	3	Nos
6	Supplying and fixing brass batten/angle holder including connection etc. as required.	8	Nos
7	Supplying and fixing following way, single pole and neutral, sheet steel, MCB distribution board, 240 volts, on surface/ recess, complete with tinned copper busbar, neutral busbar,	1	Nos

	earth bar, din bar, detachable gland plate, interconnectios, phosphatized and powder painted including earthing etc. as required. (But without MCB/RCCB/lsolator). (Make - Legrand/ABB/Havells/substantially equivalent make) 4 way, Single door		
8	Supplying and fixing 5 Amp to 32 Amp rating 240 volts, "B" series MCB, suitable for lighting & other loads in the existing MCB DB complete with connections, testing and commissioning . etc. as required. (Make - Legrand/ABB/Havells/substantially equivalent make) single pole	2	Nos
9	Supplying and fixing following rating, double pole, 240 volts, isolator in the existing MCB DB complete with connections, testing and commissioning etc. as required. (Make - Legrand/ABB/Havells/substantially equivalent make) 40 amps	1	Nos

22. **External Water Supply & Electrical work.** All external water supply, sanitation & electrical works shall be executed by other agency and that shall not be within the scope of work of the contractor.
23. **Testing of materials.** The contractor shall submit manufacture's test certificate of the materials used, at the time of delivery. The employer may send any material used in the construction of pre-fabricated houses for testing at any reputed test house/ Govt. laboratories/Govt. Institutes. The cost of testing shall be borne as under:-
    a) If the material fails, the cost will be borne by the contractor and the failed material will be replaced by the contractor without any extra cost.
    b) If the material is found acceptable, the cost will be borne by the employer.

Section VIII. Drawings

List of Drawings	
DRAWING NR.	**Drawing Name**
Residence	
1. PREFAB/RESI/3D-01	3D VIEW
2. PREFAB/ARCH/PLAN-01	GROUND FLOOR PLAN
3. PREFAB/ARCH/DWD-02	DOOR/ WINDOW DETAILS
4. PREFAB/ARCH/TERR-03	TERRACE PLAN
5. PREFAB/ARCH/ELEC-04	ELECTRICAL PLAN
6. PREFAB/ARCH/SANIT-05	SANITARY PLAN
7. PREFAB/STRUC/FOUN-01	FOUNDATION DETAILS
8. PREFAB/STRUC/SEC-02	SECTION
9. SURVEY PLAN- 01	SURVEY PLAN (Bageshwar)
10. SURVEY PLAN- 02	SURVEY PLAN (Kunwari)

CONSTRUCTION OF PREFABRICATED HOUSES
IN BAGESHWAR DISTRICT OF UTTARAKHAND

USIDCL
3/3 INDUSTRIAL AREA
PATEL NAGAR DEHRADUN

RESIDENCE (ONE UNIT)

DRG. NO.-PREFAB/RESI/3D-01

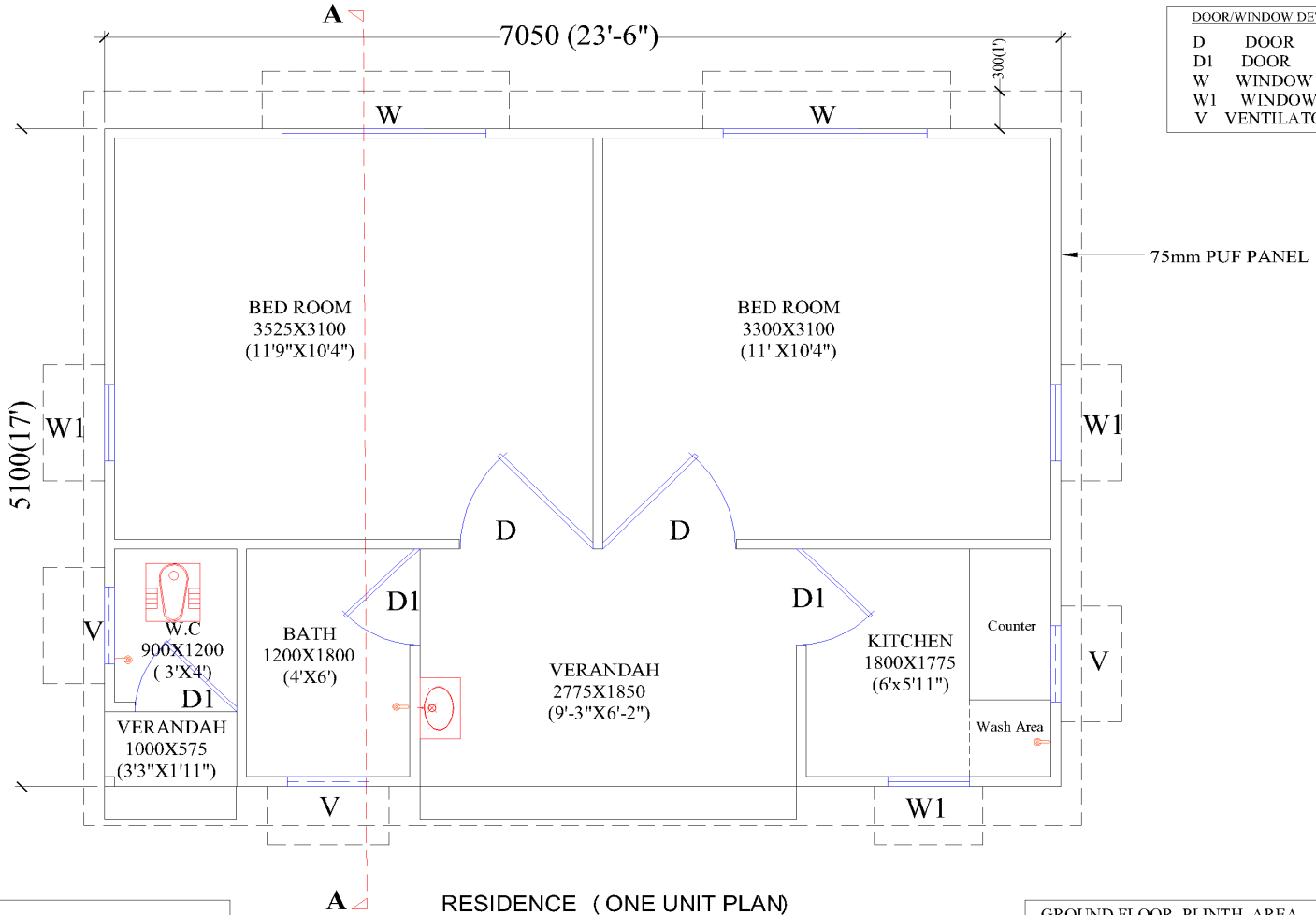

DOOR/WINDOW DETAIL

D	DOOR	1000X2100
D1	DOOR	750X2100
W	WINDOW	1500X1200
W1	WINDOW	600X1050
V	VENTILATOR	600X450

RESIDENCE (ONE UNIT PLAN)

NOTE :- DIMENSIONS IN M.M. UNLESS OTHERWISE STATED

GROUND FLOOR PLINTH AREA = 35.96 SQ. MT. (399.50 SQ. FT.)

DRAWING TITLE :
CONSTRUCTION OF PREFABRICATED HOUSES IN BAGESHWAR DISTRICT OF UTTARAKHAND

USIDCL
3/3 INDUSTRIAL AREA
PATEL NAGAR
DEHRADUN- 248 001
TEL NO:

DRG. NO.-
PREFAB/ARCH/PLAN-01

DRAWN BY:
D.P MANORI
(DRAUGHTS MAN)

DATE
01 -10- 2013

GROUND FLOOR PLAN

USIDCL

REVISION NO:
USIDCL/...../.....

ARCHITECT
Ar. Arpita Ramola

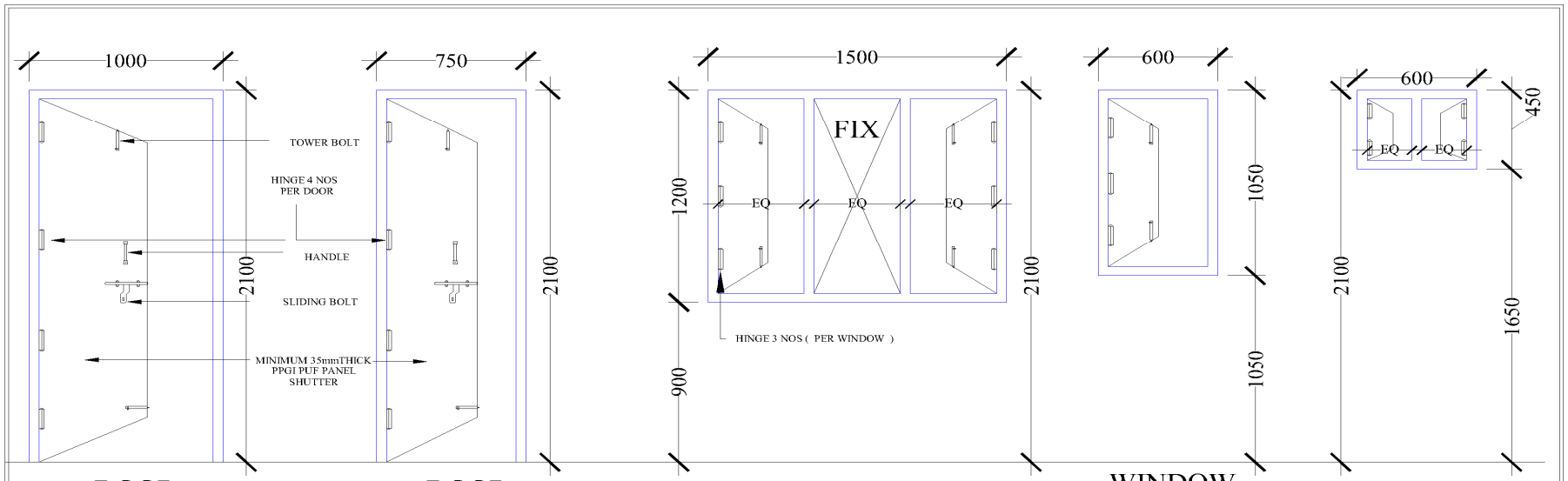

DOOR	DOOR	WINDOW	WINDOW	VENTILATOR
D(1000x2100)	D1(750x2100)	W (1500x1200)	W1 (600x1050)	V(600x450)
G.F.= 2 NOS.D.R.	G.F.= 3 NOS.D.R.	G.F.= 2 NOS.D.R.	G.F.= 3 NOS.D.R.	G.F.= 3 NOS.D.R.

DOOR/WINDOW DETAIL

D	DOOR	1000X2100
D1	DOOR	750X2100
W	WINDOW	1500X1200
W1	WINDOW	600X1050
V	VENTILATOR	600X450

DRAWING TITLE : CONSTRUCTION OF PREFABRICATED HOUSES IN BAGESHWAR DISTRICT OF UTTARAKHAND		USIDCL 3/3 INDUSTRIAL AREA PATEL NAGAR DEHRADUN- 248 001 TEL NO:	DRG. NO.- PREFAB/ARCII/DWD-02	DRAWN BY: D.P MANORI (DRAUGHTS MAN)
DATE 01 -10- 2013	DOOR/WINDOW DETAILS	USIDCL	REVISION NO: USIDCL/...../.....	ARCHITECT Ar. Arpita Ramola

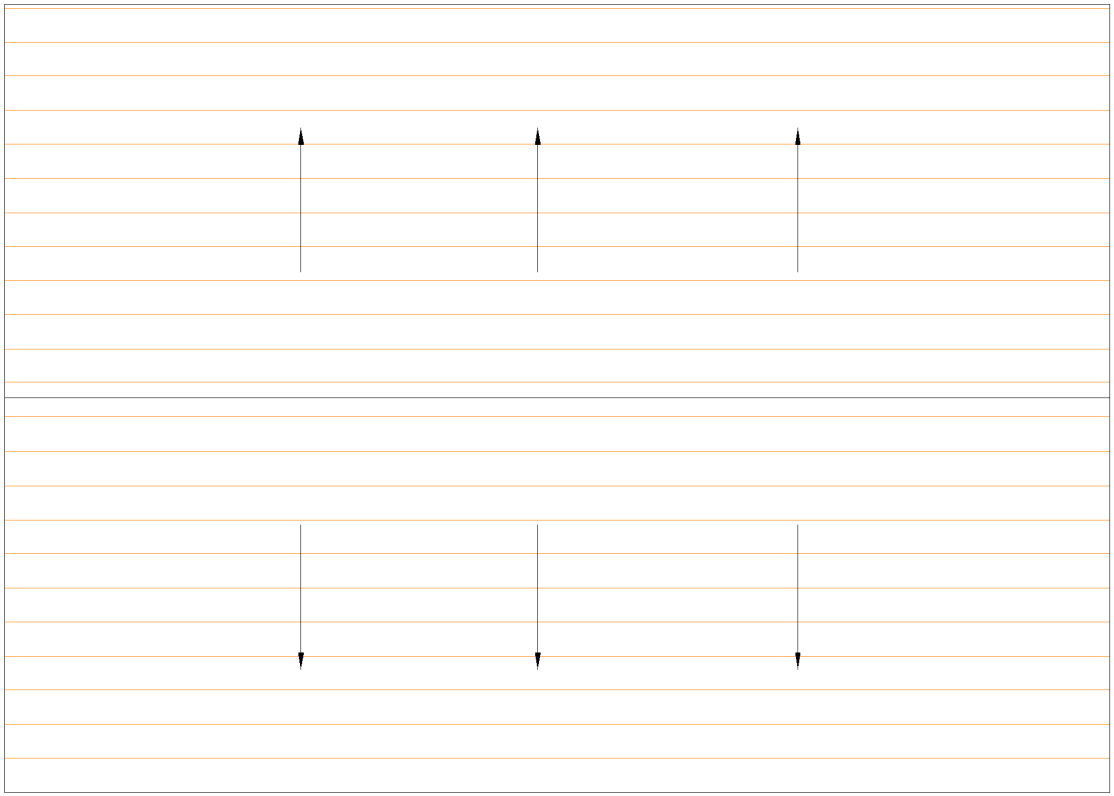

DRAWING TITLE : CONSTRUCTION OF PREFABRICATED HOUSES IN BAGESHWAR DISTRICT OF UTTARAKHAND		USIDCL	USIDCL 3/3 INDUSTRIAL AREA PATEL NAGAR DEHRADUN- 248 001 TEL NO:	DRG. NO.- PREFAB/ARCH/TERR-03	DRAWN BY: D.P MANORI (DRAUGHTS MAN)
DATE 01 -10- 2013	TERRACE PLAN			REVISION NO: USIDCL/...../.....	ARCHITECT Ar. Arpita Ramola

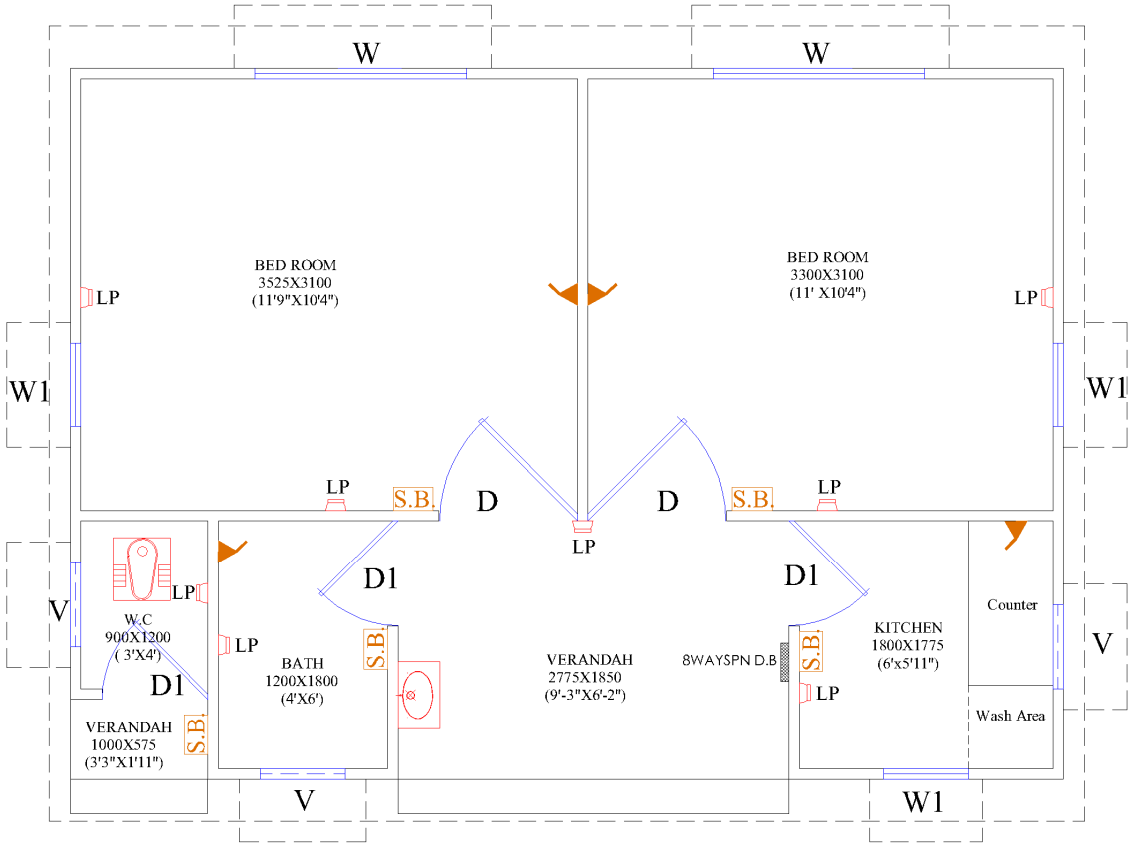

LEGEND	
SYMBOL	DESCRIPTION
	5 AMP POINT
S.B	SWITCH BOARD
LP	LIGHT POINT
	8 WAY SPN DISTRIBUTION BOARD

DRAWING TITLE : CONSTRUCTION OF PREFABRICATED HOUSES IN BAGESHWAR DISTRICT OF UTTARAKHAND		USIDCL 3/3 INDUSTRIAL AREA PATEL NAGAR DEHRADUN- 248 001 TEL NO:	DRG. NO.- PREFAB/ARCH/ELEC-04	DRAWN BY: D.P MANORI (DRAUGHTS MAN)
DATE 01 -10- 2013	ELECTRICAL PLAN	USIDCL	REVISION NO: USIDCL/...../.....	ARCHITECT Ar. Arpita Ramola

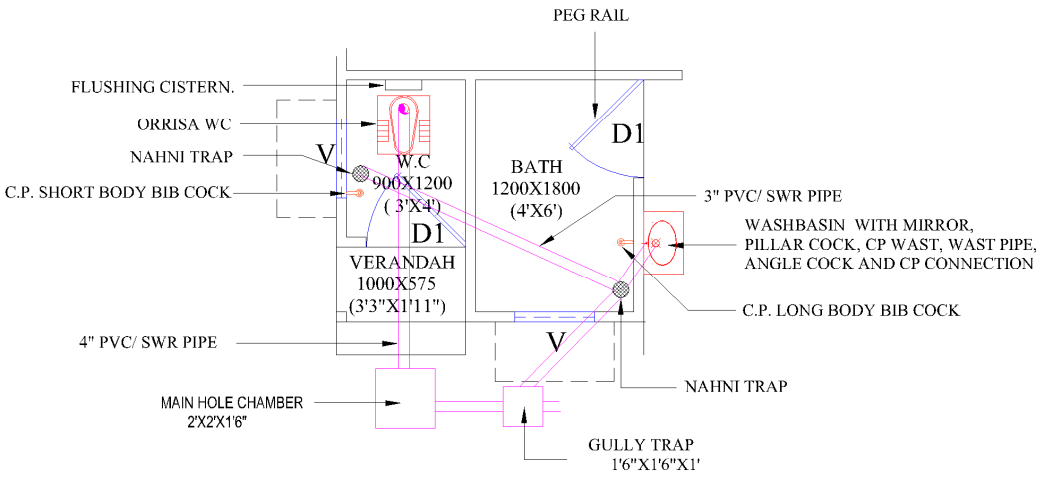

TOILET DETAIL -A

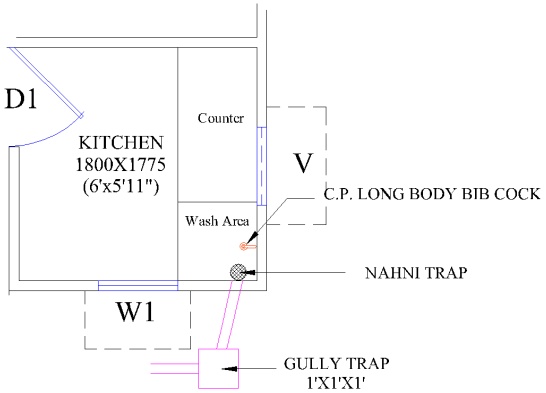

KITCHEN DETAIL - B

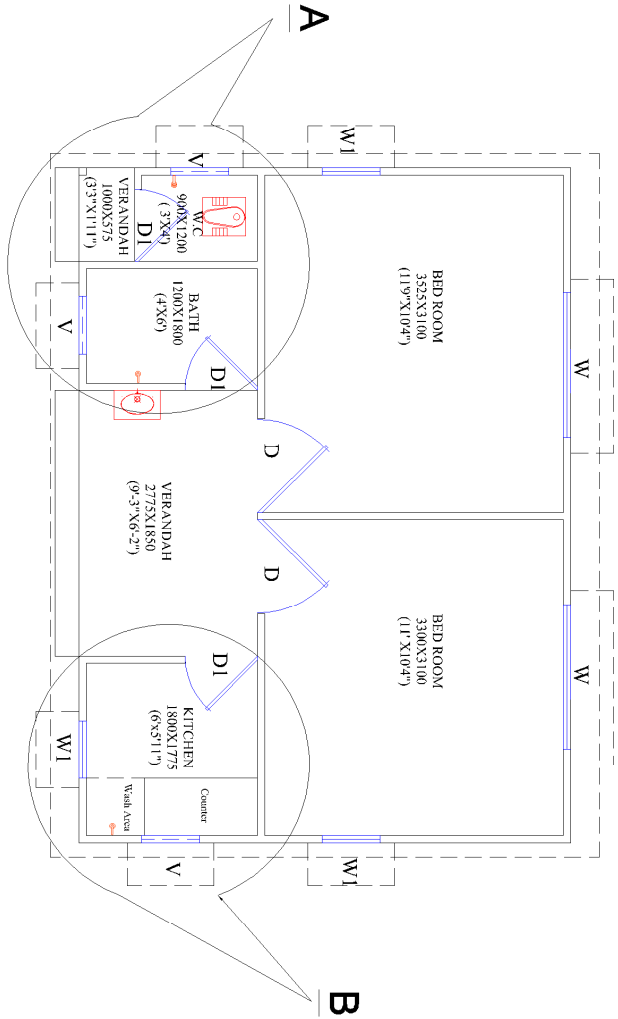

DRAWING TITLE : CONSTRUCTION OF PREFABRICATED HOUSES IN BAGESHWAR DISTRICT OF UTTARAKHAND		USIDCL 3/3 INDUSTRIAL AREA PATEL NAGAR DEHRADUN- 248 001 TEL NO:	DRG. NO.- PREFAB/ARCH/SANIT-05	DRAWN BY: D.P MANORI (DRAUGHTS MAN)
DATE 01 -10- 2013	SANITARY PLAN	USIDCL	REVISION NO: USIDCL/...../.....	ARCHITECT Ar. Arpita Ramola

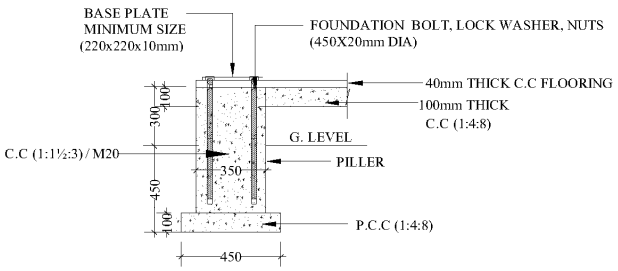

TYPICAL DETAIL FOR BOLT FOUNDATION

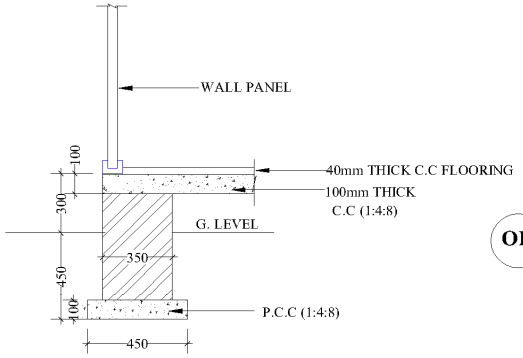

OR

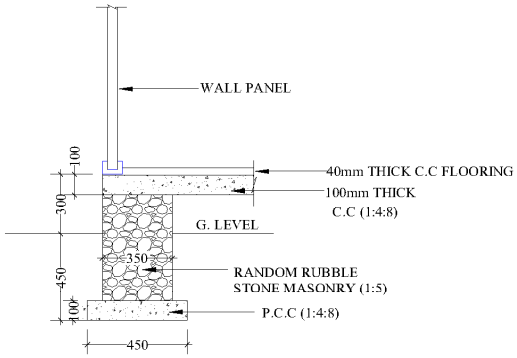

TYPICAL FOUNDATION DETAIL BY BRICK MASONRY / STONE MASONRY

DRAWING TITLE : CONSTRUCTION OF PREFABRICATED HOUSES IN BAGESHWAR DISTRICT OF UTTARAKHAND		USIDCL	USIDCL 3/3 INDUSTRIAL AREA PATEL NAGAR DEHRADUN- 248 001 TEL NO:	DRG. NO.- PREFAB/STRUC/FOUN -01	DRAWN BY: D.P MANORI (DRAUGHTS MAN)
DATE 01 -10- 2013	FOUNDATION DETAILS			REVISION NO: USIDCL/...../.....	ARCHITECT Ar. Arpita Ramola

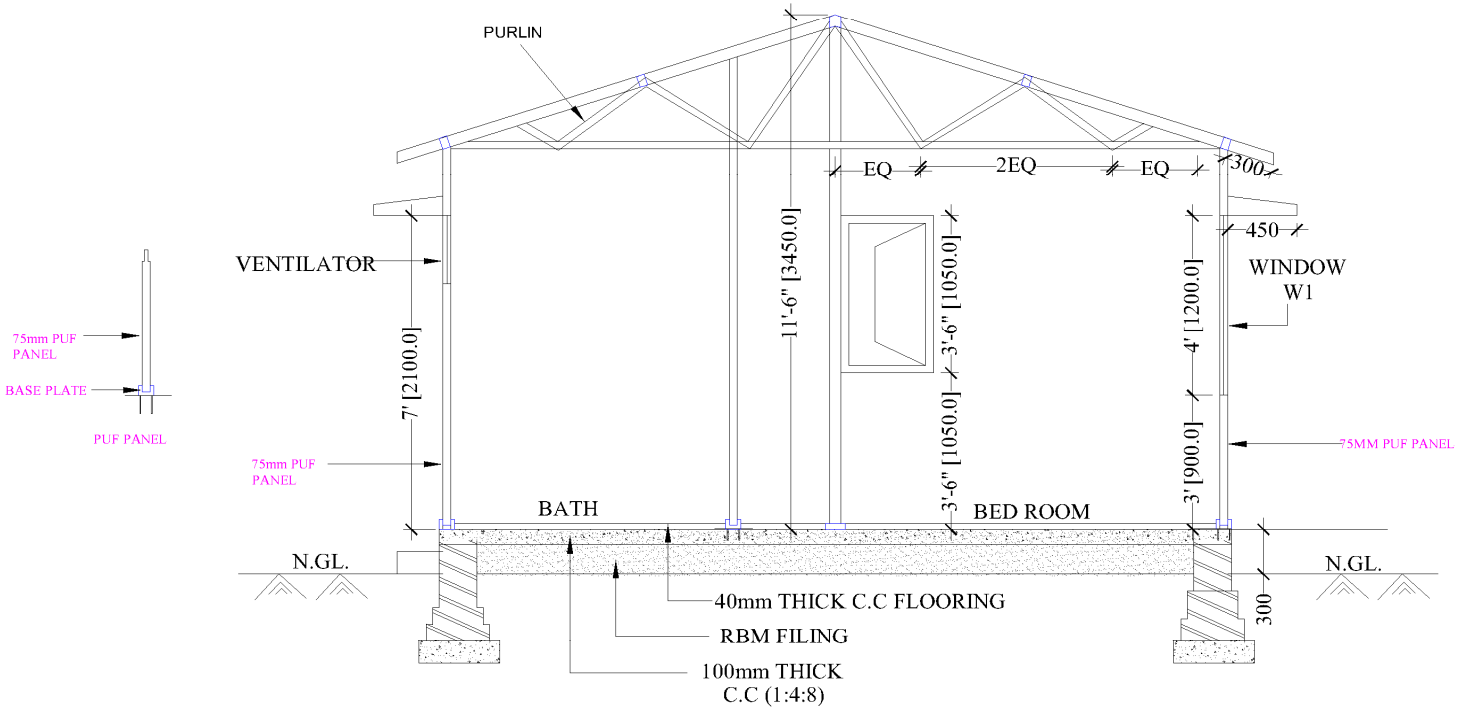

SECTION AT A-A (Ref.Drawing-01)

SCHEMATIC/INDICATIVE DIAGRAM OF FRAME WORK

(ACTUAL SIZE AND SHAPE WILL DEPEND ON STRUCTURAL DESIGN & MATERIAL USED FOR PARTICULAR LOCATION)

DRAWING TITLE : CONSTRUCTION OF PREFABRICATED HOUSES IN BAGESHWAR DISTRICT OF UTTARAKHAND		USIDCL 3/3 INDUSTRIAL AREA PATEL NAGAR DEHRADUN- 248 001 TEL NO:	DRG. NO.- PREFAB/STRUC/SEC -02	DRAWN BY: D.P MANORI (DRAUGHTS MAN)
DATE 01 -10- 2013	SECTION	USIDCL	REVISION NO: USIDCL/...../.....	ARCHITECT Ar. Arpita Ramola

SCALE 1:700
PAPER SIZE A4

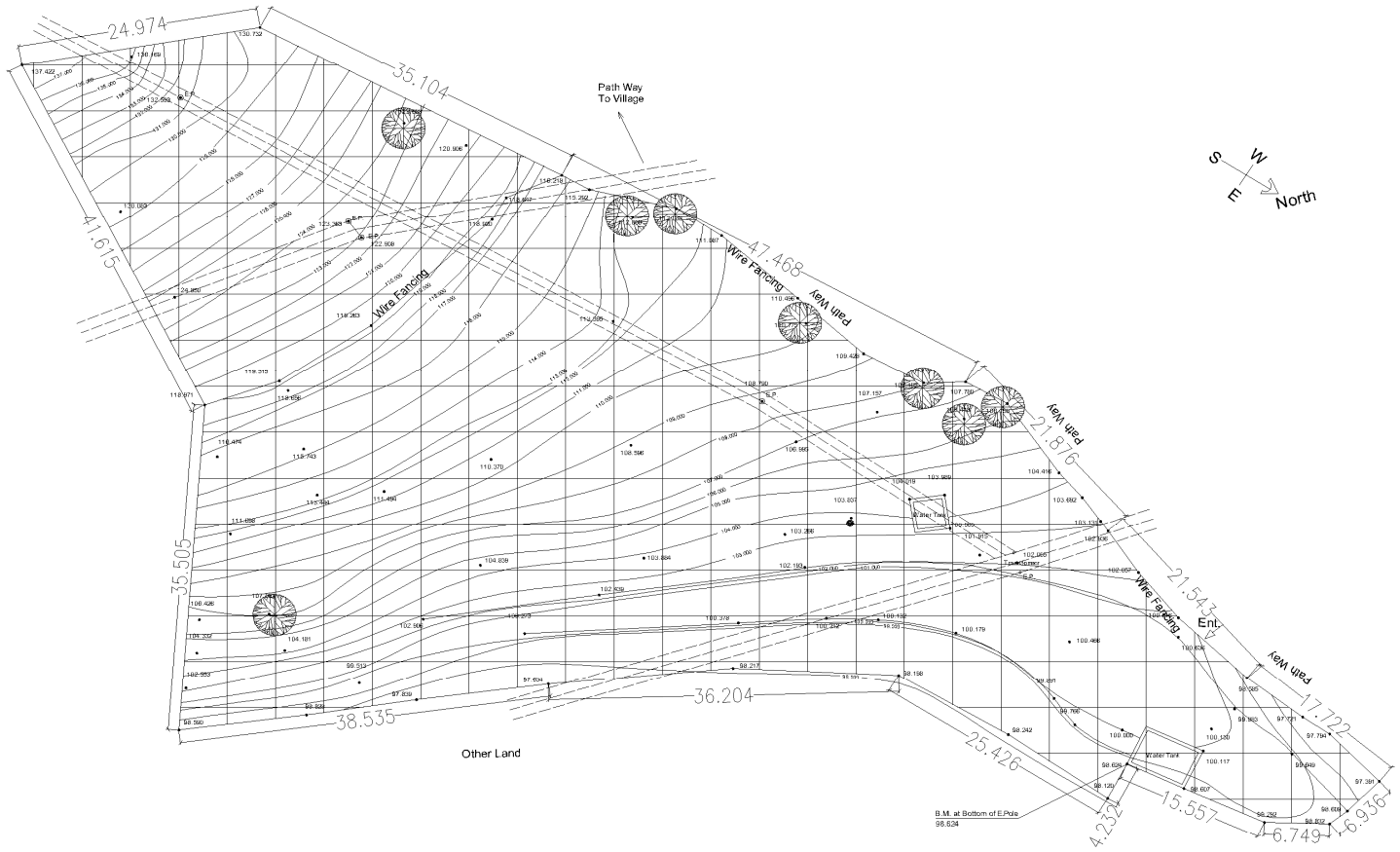

Symbols :-
E. Lines
Boundry Line
Levels
Dimensions
Contour Line
Grid Lines (5MX5M)
Cheer Tree

Total Land Area = 5617.841 Sqmt.

DRAWING TITLE :

TOPOGRAPHICAL SURVEY PLAN FOR
PREFABRICATED HOUSES BAGESHWAR
DISTRICT OF UTTARAKHAND

DATE
25 -09- 2013

SURVEY PLAN

USIDCL

USIDCL
3/3 INDISTRIAL AREA
PATEL NAGAR
DEHRADUN- 248 001
TEL NO:

DRG. NO.-
SURVEY PLAN-01

REVISION NO:
USIDCL/...../.....

URVEYED &
DRAWING BY:
TECHNICAL CONSULTANCY SERVICES
Regd off 14-C,ARAWALI ENCLAVE, GMS ROAD DEHRADUN
PH: 0135- 3251869, 9837043174, 9997093344.
E-Mail: tcsdoon1@rediffmail.com/tcsdoon@yahoo.com

SCALE 1:800
PAPER SIZE A4

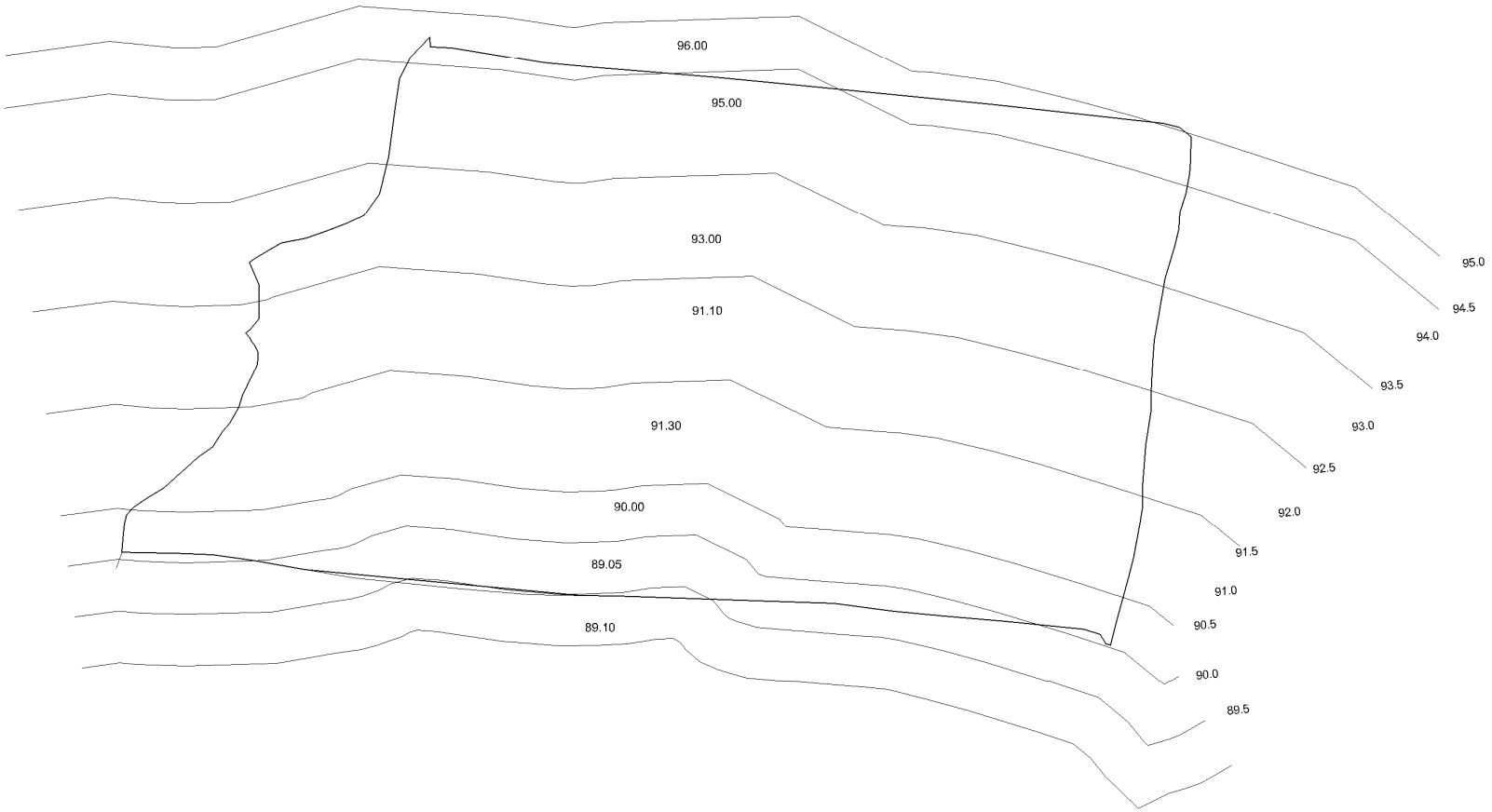

VILLAGE - KUNWARI(KAPKOT), BAGESWAR
TOTAL PLOT AREA = 6155.00 Sq.M.

DRAWING TITLE :
TYPICAL SURVEY PLAN FOR
PREFABRICATED HOUSES BAGESHWAR
DISTRICT OF UTTARAKHAND

DRG. NO.-
SURVEY PLAN-02

SURVEYED & DRAWING BY:
TECHNICAL CONSULTANCY SERVICES
Reg4 off 14-C,RAWAL ENCLAVE, GMS ROAD DEHRADUN
PH: 0135- 3251569, 9837943174, 9997093344.
E-Mail: tcsdoon1@rediffmail.com/tcsdoon@yahoo.com

USIDCL
3/3 INDISTRIAL AREA
PATEL NAGAR
DEHRADUN- 248 001
TEL NO:

DATE
25 -09- 2013

SURVEY PLAN

USIDCL

REVISION NO:
USIDCL/...../.....

ARCHITECT
Ar. Arpita Ramola

Section IX : BILL OF QUANTITIES

Bill of Quantities

Sl. No.	Description of item (with brief specification and reference to Book of specification	Quantity	Unit	Rate		Amount
				In figures	In words	
1	Construction of Pre-fabricated Houses in Bageshwar District of Uttarakhand of size 7.05m x 5.10m x 2.60m (eaves end) as per drawings, complete in all respect in a livable condition. The scope of work includes making foundation, flooring, erection of complete prefabricated structure with doors, windows and ventilators alongwith accessories, internal electrification, internal water supply and sanitary work. (Refer detailed drawings and specifications).	50	Nos.			
Total Bid Price (in figures)						
(in words)						

Note:

1. *Unit rate and price shall be quoted by the bidder in Indian Rupees [ITB Clause 14.1]*

2. *Where there is a discrepancy between the rate in figures and words, the rates in words will govern.[ITB Clause 28.1**(a)**]*

3. *Where there is a discrepancy between the unit rate and the line item total resulting from multiplying the unit rate by quantity, the unit rate quoted shall govern [ITB Clause 28.1(b)].*

Section X. Security Forms

Samples of acceptable forms of Bid, Performance, and Advance Payment Securities are provided in this Section X. Bidders shall not complete the Performance and Advance Payment Security forms at this stage of the procurement process. Only the successful Bidder shall be required to provide these two securities.

Forms of Securities

Acceptable forms of securities are annexed. Bidders should not complete the Performance and Advance Payment Security forms at the time. Only the successful Bidder will be required to provide Performance and Advance Payment Securities in accordance with one of the forms, or in a similar form acceptable to the Employer.

Annex A :	Bid Security (Bank Guarantee)
Annex B :	Performance Bank Guarantee
Annex B1 :	Performance Bank Guarantee for Unbalanced Items
Annex C :	Bank Guarantee for Advance Payment

Form of Bid Security (Bank Guarantee)

WHEREAS,_____[*name of Bidder*] (hereinafter called "the Bidder") has submitted his Bid dated _____[*date*] for the construction of _____ [*name of Contract*] (hereinafter called "the Bid").

KNOW ALL PEOPLE by these presents that We _____[*name of bank*] of _____[*name of country*] having our registered office at _____ _____(hereinafter called "the Bank") are bound unto _____ [*name of Employer*] (hereinafter called "the Employer") in the sum of _____[36] for which payment well and truly to be made to the said Employer the Bank binds itself, his successors and assigns by these presents.

SEALED with the Common Seal of the said Bank this _____ day of _____ 19____.

THE CONDITIONS of this obligation are:

(1) If after bid opening the Bidder withdraws his bid during the period of Bid validity specified in the Form of Bid;

Or

(2) If the Bidder having been notified of the acceptance of his bid by the Employer during the period of Bid validity:

   (a) fails or refuses to execute the Form of Agreement in accordance with the Instructions of Bidders, if required; or
   (b) fails or refuses to furnish the Performance Security, in accordance with the Instruction to bidders; or
   (c) does not accept the correction of the Bid Price pursuant to Clause 28.

We undertake to pay to the Employer up to the above amount upon receipt of his first written demand, without the Employer having to substantiate his demand, provided that in his demand the Employer will note that the amount claimed by him is due to him owing to the occurrence of one or any of the three conditions, specifying the occurred condition or conditions.

This Guarantee will remain in force up to and including the date _____[37] days after the deadline for submission of Bids as such deadline is stated in the Instructions to Bidders or as it may be extended by the Employer, notice of which extension(s) to the Bank is hereby waived. Any demand in respect of this guarantee should reach the Bank not later than the above date.

---

[36] The Bidder should insert the amount of the guarantee in words and figures denominated in Indian Rupees. This figure should be the same as shown in Clause 16.1 of the Instructions of Bidders.

[37] 45 days after the end of the validity period of the Bid.

DATE _____ SIGNATURE OF THE BANK_____

WITNESS_____ SEAL_____

_____

[*Signature, name and address*]

Performance Bank Guarantee

To: _____ [*name of Employer*]
_____[*address of Employer*]

WHEREAS _____[*name and address of Contract*] (hereinafter called "the Contractor") has undertaken, in pursuance of Contract No._____ dated_____ to execute_____ [*name of Contract and brief description of Works*] (hereinafter called "the Contract");

AND WHEREAS it has been stipulated by you in the said Contract that the Contractor shall furnish you with a Bank Guarantee by a recognized bank for the sum specified therein as security for compliance with his obligations in accordance with the contract;

AND WHEREAS we have agreed to give the Contractor such a Bank Guarantee;

NOW THEREFORE we hereby affirm that we are the Guarantor and responsible to you, on behalf of the Contractor, up to a total of _____ [*amount of guarantee*][38] _____ [*in words*], such sum being payable in the types and proportions of currencies in which the Contract Price is payable, and we undertake to pay you, upon your first written demand and without cavil or argument, any sum or sums within the limits of _____[*amount of guarantee*] as aforesaid without your needing to prove or to show grounds or reasons for your demand for the sum specified therein.

We hereby waive the necessity of your demanding the said debt from the Contractor before presenting us with the demand.

We further agree that no change or addition to or other modification of the terms of the contract or of the Works to be performed thereunder or of any of the Contract documents which may be made between you and the Contractor shall in any way release us form any liability under this guarantee, and we hereby waive notice of any such change, addition or modification.

This guarantee shall be valid until……...(i.e.) 28 days from the date of expiry of the Defects Liability Period.

Signature and seal of the guarantor_____
Name of Bank_____
Address_____
Date _____

[38] An amount shall be inserted by the Guarantor, representing the percentage of the Contract Price specified in the Contract and denominated in Indian Rupees.

PERFORMANCE BANK GUARANTEE (for unbalanced items)

To: _____ [*name of Employer*]
_____[*address of Employer*]

WHEREAS _____[*name and address of Contract*] (hereinafter called "the Contractor") has undertaken, in pursuance of Contract No._____ dated_____ to execute_____ [*name of Contract and brief description of Works*] (hereinafter called "the Contract");

AND WHEREAS it has been stipulated by you in the said Contract that the Contractor shall furnish you with a Bank Guarantee by a recognized bank for the sum specified therein as security for compliance with his obligations in accordance with the contract;

AND WHEREAS we have agreed to give the Contractor such a Bank Guarantee;

NOW THEREFORE we hereby affirm that we are the Guarantor and responsible to you, on behalf of the Contractor, up to a total of _____ [*amount of guarantee*][39] _____ [*in words*], such sum being payable in the types and proportions of currencies in which the Contract Price is payable, and we undertake to pay you, upon your first written demand and without cavil or argument, any sum or sums within the limits of _____[*amount of guarantee*] as aforesaid without your needing to prove or to show grounds or reasons for your demand for the sum specified therein.

We hereby waive the necessity of your demanding the said debt from the Contractor before presenting us with the demand.

We further agree that no change or addition to or other modification of the terms of the contract or of the Works to be performed thereunder or of any of the Contract documents which may be made between you and the Contractor shall in any way release us form any liability under this guarantee, and we hereby waive notice of any such change, addition or modification.

This guarantee shall be valid until……...(i.e.) 28 days from the date of issue of the certificate of completion of works.

Signature and seal of the guarantor_____
Name of Bank_____
Address_____
Date _____

[39] An amount shall be inserted by the Guarantor, representing the percentage of the Contract Price specified in the Contract and denominated in Indian Rupees.

BANK GUARANTEE FOR ADVANCE PAYMENT

To: _____ [*name of Employer*]
_____[*address of Employer*]
_____[*name of Contract*]

Gentlemen:

In accordance with the provisions of the Conditions of Contract, sub clause 51.1 ("Advance Payment") of the above-mentioned Contract, _____ [*name and address of Contractor*] (hereinafter called "the Contractor") shall deposit with _____ [*name of Employer*] a bank guarantee to guarantee his proper and faithful performance under the said Clause of the Contract in an amount of _____ [*amount of guarantee*][40] _____ [*in words*].

We, the _____[*bank or financial institution*], as instructed by the Contractor, agree unconditionally and irrevocably to guarantee as primary obligator and not as Surety merely, the payment to _____ [*name of Employer*] on his first demand without whatsoever right of objection on our part and without his first claim to the Contractor, in the amount not exceeding _____ [*amount of guarantee*] _____ [*in words*].

We further agree that no change or addition to or other modification of the terms of the Contract or of Works to be performed thereunder or of any of the Contract documents which may be made between _____ [*name of Employer*] and the Contractor, shall in any way release us from any liability under this guarantee, and we hereby waive notice of any such change, addition or modification.

This guarantee shall remain valid and in full effect from the date of the advance payment under the Contract until _____[*name of Employer*] receives full repayment of the same amount from the Contractor.

Yours truly,

Signature and seal of the guarantor_____
Name of Bank/Financial Institution_____
Address_____
Date _____

[40] An amount shall be inserted by the bank representing the amount of the Advance Payment, and denominated in Indian Rupees.